NORTH POINT CABINETRY®

2026 Cabinet Specifications & Pricing

The Quick Advantage

Ships QUICKLY, Assembles FAST

NorthPoint Cabinetry offers a *quick* advantage for you and your customer by making it fast and easy to design, order, ship, and assemble cabinets. *Why does this matter?* With a reduction in time and labor, you can complete more jobs and see significant savings.

Some specific ways the NorthPoint Cabinetry Quick Advantage can save you time & money:

- **Quick to Design**
  Our cabinets are available in Cyncly Design Flex and ProKitchen software, making kitchen design fast and easy.

- **Quick to Order**
  Use our quoting tool to build an order, then easily place orders on our website at NorthPointCabinetry.com, or via email or fax.

- **Quick to Ship**
  With 6 dedicated warehouses, QuickBuild orders typically ship in 48 hours and Assembled orders within 10 business days.

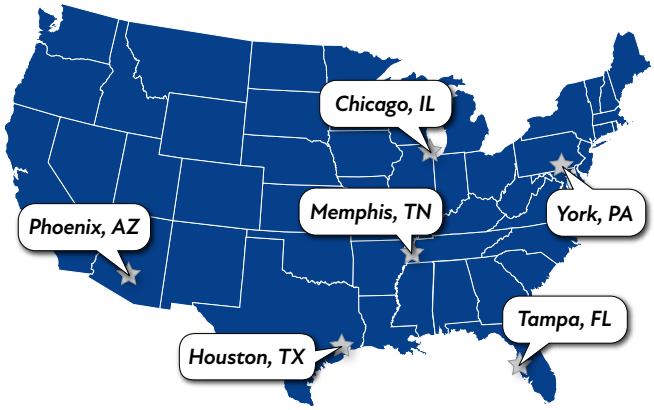

- **Quick to Assemble**
  With our **QuickBuild**® cabinets, the average assembly time per cabinet is 8 minutes*; you can build a medium-sized kitchen in less than half a day. Or save time and labor by ordering cabinets assembled.

Need help designing kitchens?

We've partnered with Kitchen365 to deliver professional designs for NorthPoint Cabinetry. Faster turnarounds. Fewer headaches. Kitchen365 is a trusted kitchen design service with professionally trained kitchen designers who have deep industry knowledge and are ISO-certified.

Log into www.HardwareResources.com and click on the button for Kitchen Design Services to get started.

**Specialty cabinets may take longer than average to assemble.*

Table of Contents

The Quick Advantage ..... Inside Front Cover

About Us 2

Collection Overview 3

Cabinet Features & Specs 4–5

Cabinet Lineup 6–8

Nomenclature Guide 9

Video Resources 10

Cabinet Opening Guide
- Wall Cabinets 11–12
- Base Cabinets 13
- Pantry Cabinets 14
- Specialty Cabinets 15
- Vanity Cabinets 16

Cabinet Dimensions
- Wall Cabinets 17–33
- Base Cabinets 34–44
- Pantry Cabinets 45–46
- Specialty Cabinets 47–53
- Vanity Cabinets 54–65
- Accessories 66–81

Pricing
- Wall Cabinets 82–86
- Base Cabinets 87–89
- Pantry Cabinets 90
- Oven Cabinets 91
- Specialty Cabinets 92
- Vanity Cabinets 93–95
- Accessories 96
- Panels and Fillers 97–101
- Mouldings 102–104
- Embellishments 105
- Organizers 106
- Touch-up Kits 107
- Samples 107–108

Cross Reference Guide 109–125

Cabinet Care & Cleaning 126

MAP Policy 127

Warranty for Finished Cabinetry 128

Warranty for Unfinished Cabinetry 129–130

Index 131–132

Ordering Information ..... Inside Back Cover

About Us

The kitchen is the gathering place of the home.
It is where laughter, details of the day, and meals are shared with family and friends. NorthPoint Cabinetry offers quality, stylish cabinetry to bring that space to life. Let us elevate your kitchen design to help enhance those special moments that families share together.

NorthPoint Cabinetry offers a selection of on-trend products with the most popular styles to choose from. All styles reflect current kitchen design trends with enough variation to fit the homeowner's unique personality. Each style comes in a wide array of cabinet combinations so that you can design the perfect kitchen to fit their busy lifestyle. Customize the kitchen to the homeowner's needs by adding our vast selection of organizers, lighting, and decorative hardware. These additions make the kitchen high-functioning and stunningly beautiful. We also offer a wide variety of bathroom vanity cabinets that echo the kitchen cabinetry to tie the whole home together.

Quality materials and construction paired with simple and quick assembly make NorthPoint Cabinetry the standout choice. Cabinets are in stock, shipping quickly from our strategically located warehouses across the U.S. and deliver in just days. Our QuickBuild® cabinetry features a unique dovetail and pocket screw construction that produces a sturdy cabinet with a clean interior free of fasteners. Cabinets are also available assembled and ship within 2 weeks plus delivery time.

Our 30-year history of manufacturing, reputation for high inventory levels, and on-time shipping mean you can rely on receiving quality product with exemplary service. Our knowledgeable customer service team is available to answer questions allowing you to make the right decision for your kitchen and bath design.

PREMIER

CATALINA

More than modern. The Catalina design features a full-overlay Shaker style door and 5-piece drawer front. Create a classic kitchen that will stand the test of time. This on-trend cabinet style makes an instant impression but still has enduring appeal. Breathe fresh air into your space with the Catalina design.

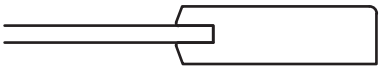

Available in 9 finishes:

- Stained Espresso
- Stained Sandstone
- Stained Slate
- Painted Pebble Grey
- Painted Polar White
- Painted Shell White - NEW
- Painted Sage Green - NEW
- Painted Nautical Blue - NEW
- Unfinished

PREMIER

MAUI

Sometimes the details make all the difference. The Maui design features a full-overlay transitional door and 5-piece drawer front with a twist of character. The door detail creates a graceful balance between traditional and contemporary. Add a hint of refined warmth and depth to your kitchen with the Maui design. It's sure to make your kitchen a conversation piece.

Available in 2 finishes:

- Stained Slate
- Painted Polar White

ESSENTIALS

HATTERAS

Simple and Sleek. The Hatteras design features a partial-overlay, Shaker style door and slab drawer front with clean lines that are all the craze in contemporary kitchen design. Transform the space from modern to transitional by changing up the accessories and accents.

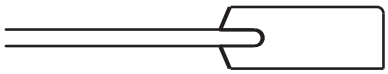

Available in 4 finishes:

- Stained Espresso
- Stained Slate
- Painted Pebble Grey
- Painted Polar White

Note: Prices and specifications are subject to change without notice. Please refer to our website or Customer Service for current product information.

Thoughtfully Designed. Carefully Crafted.

	DOOR STYLES	PREMIER Collection **Catalina, Maui**	ESSENTIALS Collection **Hatteras**
A	OVERLAY	• **Full-overlay** doors and drawer fronts	• **Partial-overlay** doors and drawer fronts
B	FACE FRAME	• 3/4" x 1-1/2" solid birch face frame	• 3/4" x 1-1/2" solid birch face frame
C	DOORS	• Stained (and Maui painted) doors are 5-piece birch solid wood cope-and-stick construction with a 3/4" thick, **2-3/4" wide door frame** and 1/4" veneered center panel • Painted (except Maui) doors are 5-piece HDF cope-and-stick with a 3/4" thick, **2-3/4" wide door frame** with 1/4" HDF center panel	• Stained doors are 5-piece birch solid wood cope-and-stick construction with a 3/4" thick, **2" wide door frame** and 1/4" veneered center panel • Painted doors are 5-piece HDF cope-and-stick with a 3/4" thick, **2" wide door frame** and 1/4" HDF center panel
D	HINGES	• 6-way adjustable **soft-close** concealed hinges	• 6-way adjustable **self-close** concealed hinges
E	DRAWER FRONTS	• **5-piece** drawer fronts with 3/4" thick frame and 1/4" thick center panel	• 3/4" thick **slab** drawer fronts
F	DRAWERS	• 5/8" thick solid wood dovetail drawer boxes with 1/2" thick veneered plywood drawer bottom	• 5/8" thick solid wood dovetail drawer boxes with 1/2" thick veneered plywood drawer bottom
G	DRAWER SLIDES	• Premium full extension, 100 lb **dynamic** weight rated, **adjustable undermount soft-close slides**	• 3/4 extension, 100 lb **static** weight rated, undermount **epoxy slides**
H	SHELVES	• 3/4" thick veneered plywood adjustable shelves – half depth in base cabinets • 5 mm spoon pins included	• 3/4" thick veneered plywood adjustable shelves – half depth in base cabinets • 5 mm spoon pins included
I	END PANELS	• 1/2" thick plywood end panels with exterior finish to match • UV coated, natural birch interior	• 1/2" thick plywood end panels with exterior finish to match • UV coated, natural birch interior
J	TOP/BOTTOM PANELS	• 1/2" thick plywood captured top and bottom • UV coated, natural birch interior	• 1/2" thick plywood captured top and bottom • UV coated, natural birch interior
K	BACK PANELS	• UV coated plywood back panel	• UV coated plywood back panel
L	CONSTRUCTION	• All plywood cabinet construction • QuickBuild® Dovetail / Pocket screw assembly system • 3/4" thick solid wood corner braces • 4-1/2" high toe kick	• All plywood cabinet construction • QuickBuild® Dovetail / Pocket screw assembly system • 3/4" thick solid wood corner braces • 4-1/2" high toe kick

Note: Prices and specifications are subject to change without notice. Please refer to our website or Customer Service for current product information.

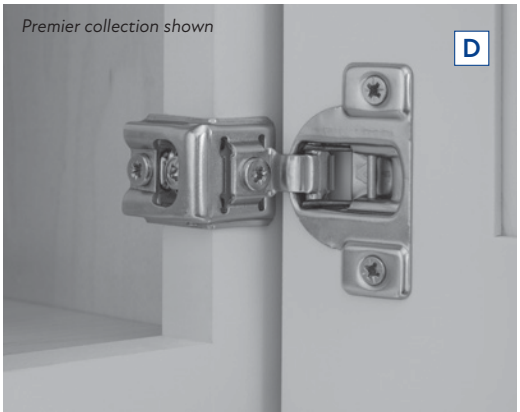

K

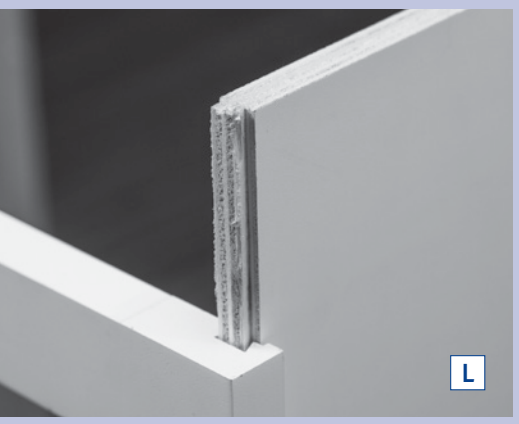
L

L

F

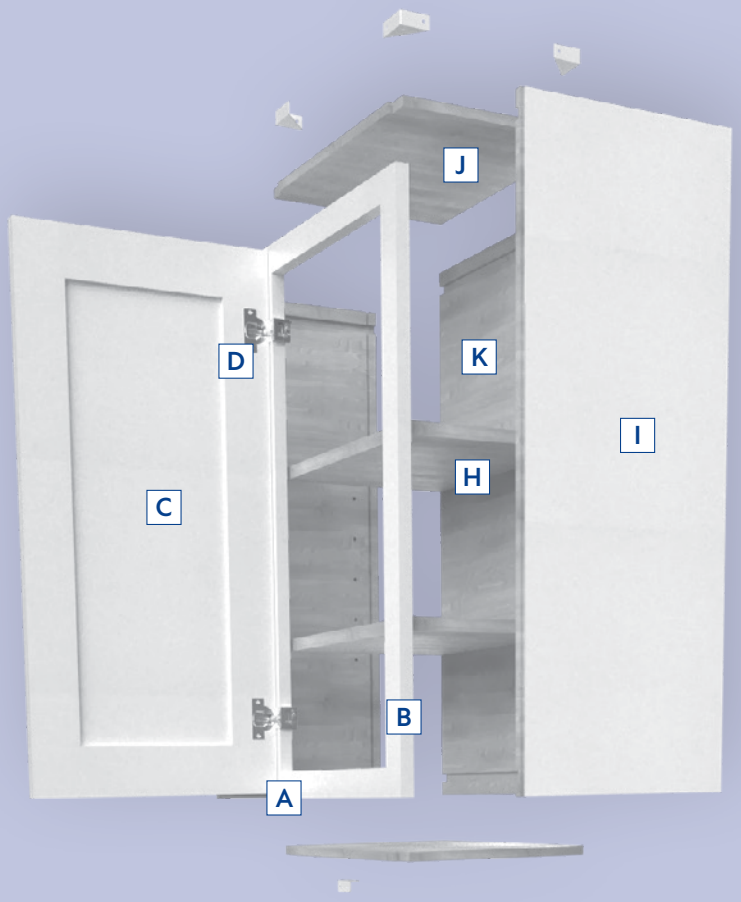
J
D
K
I
H
C
B
A

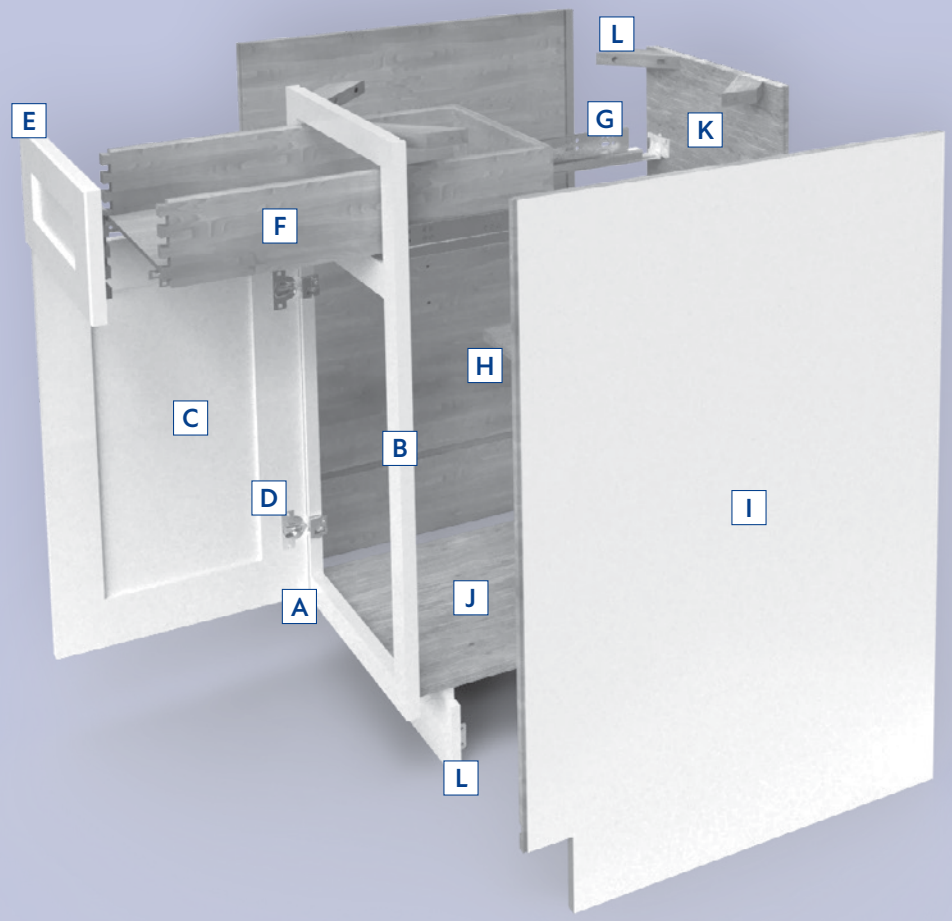
L
E
G
K
F
H
C
B
I
D
J
A
L

The Cabinet Lineup

WALL CABINETS

12” deep except where noted
42” high wall cabinets will have 3 shelves
*39” and 42” widths will have a center stile unless otherwise noted

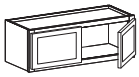

Double Door
12” Height
30”, 33”, 36”
or *39” Width

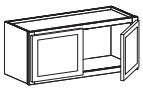

Double Door
15” Height
30”, 33”, 36”
or *39” Width

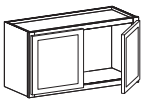

Double Door
18” Height
21”, 24”, 30”, 33”, 36”
or *39” Width

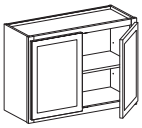

Double Door
24” Height
30”, 33”, 36” or *39” Width

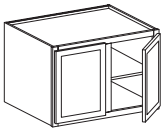

Deep Double Door
18” or 24” Height • 24” Depth
36” or *39” Width
18” Height does not have shelf

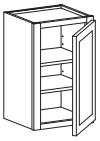

Single Door
30” Height
9”, 12”, 15”, 18” or 21” Width

Double Door
30” Height
24”, 27”, 30”, 33”,
36”, *39” or *42” Width

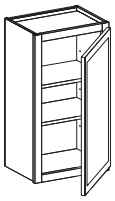

Single Door
36” Height
9”, 12”, 15”, 18” or 21” Width

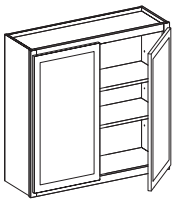

Double Door
36” Height
24”, 27”, 30”, 33”,
36”, *39” or *42” Width

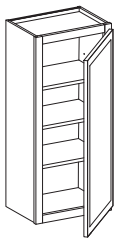

Single Door
42” Height
9”, 12”, 15”, 18” or 21” Width

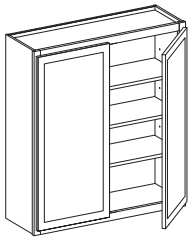

Double Door
42” Height
24”, 27”, 30”, 33”,
36”, *39” or *42” Width

Single & Double Glass Door
Matching Interior
30” Height
15”, 18”, 30” or 36” Width

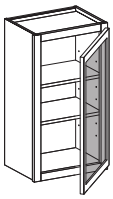

Single & Double Glass Door
Matching Interior
36” Height
15”, 18”, 30” or 36” Width

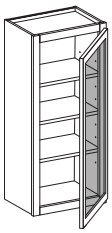

Single & Double Glass Door
Matching Interior
42” Height
15”, 18”, 30” or 36” Width

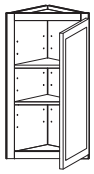

Wall End Single Door
30”, 36” or 42” Height
12” Width

Glass door wall cabinets only available in the Premier collection

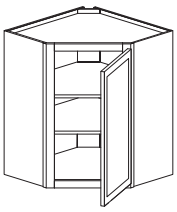

Diagonal Corner
30”, 36” or 42” Height
12 or 15” Depth
24” and 27” Width

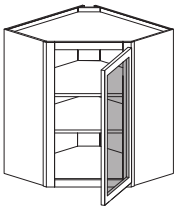

Diagonal Corner Glass Door
Matching Interior
30”, 36” or 42” Height
12 or 15” Depth
24” and 27” Width
Glass door wall cabinets only available in the Premier collection

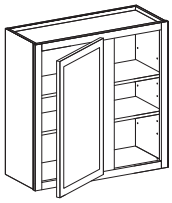

Universal Blind Corner
30”, 36” or 42” Height
30”-33” Width

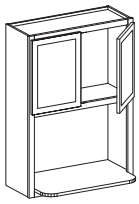

Microwave Wall Cabinet
Extended Shelf
36” Height
30” Width

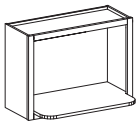

Microwave Wall Cabinet
Extended Shelf
18” Height
30” Width

BASE CABINETS

24” deep, 34-1/2” high except where noted
*39” and 42” widths will have a center stile unless otherwise noted

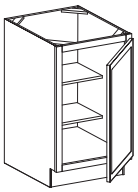

Full Height Single Door
9”, 12”, 15” or 18” Width

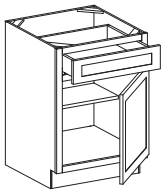

Single Door and Drawer
12”, 15”, 18” or 21” Width

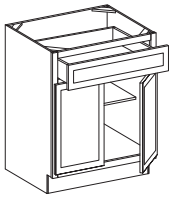

Double Door and Single Drawer
24”, 27” or 30” Width

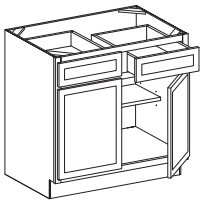

Double Door and Double Drawer
33”, 36”, *39” or *42” Width

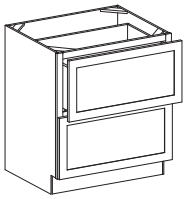

Double Drawer
30” or 36” Width

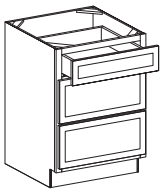

Triple Drawer
12”, 15”, 18”, 21”, 24”, 30” or 36” Width

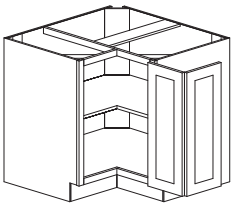

Base Corner Cabinet
33” or 36” Width

(Lazy Susan inserts available)

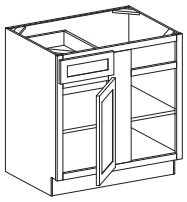

Universal Blind Base Corner
39”-42”, 42”-45” or *45-48” Width

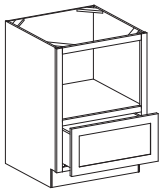

Microwave Base Cabinet with Drawer
30” Width

SINK BASE CABINETS

24” deep, 34-1/2” high except where noted.
*39” and 42” widths will have a center stile unless otherwise noted

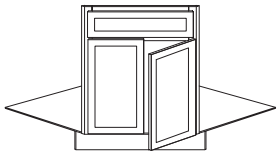

Corner Sink Front Double Door
24” Depth
(2-piece bottom panel)

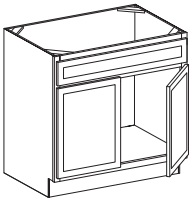

Sink Base Double Door
30”, 33”, 36” or 39” Width

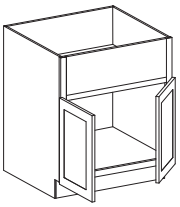

Farmhouse Sink Base Double Door
36” or 39” Width
(No center stile)

TALL CABINETS

24” deep except where noted.

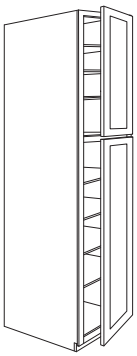

Utility/Pantry Single Door
84”, 90” (6 shelves), or 96” Height (7 shelves)
18” Width

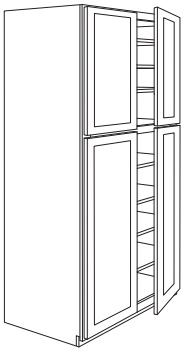

Utility/Pantry Double Door
84”, 90” (6 shelves), or 96” Height (7 shelves)
24” or 30” Width

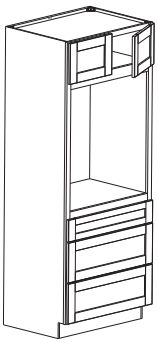

Universal Oven Double Door
84”, 90” or *96” Height
33” Width

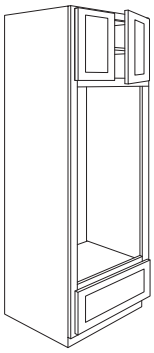

Oven Double Door, Single Drawer
84”, 90” or *96” Height
33” Width
*Single shelf in 96” only
(Double Oven Overlay Panel available)

VANITY CABINETS

21” deep, 34-1/2” high except where noted
*42” widths will have a center stile

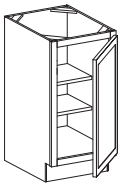

Single Door
12” Width

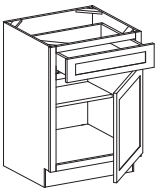

Single Door
and Drawer
12”, 15” or 18” Width

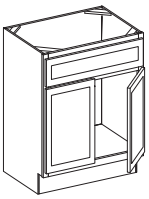

Double Door
24”, 27”, 30”, 33”
or 36” Width

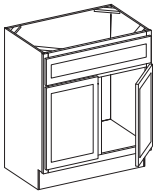

Double Door
Center Stile
42” Width

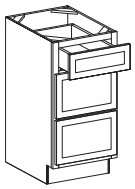

Triple Drawer
12”, 15”, 18” and
21” Width

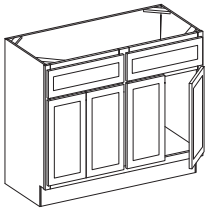

Two Double Door
48” Width

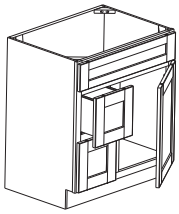

Single Door and
Double Drawers Left
30” and 36” Width

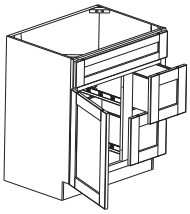

Single Door and
Double Drawers Right
30” and 36” Width

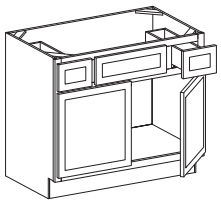

Double Door and
Double Drawer
36”, 42” or 48” Width

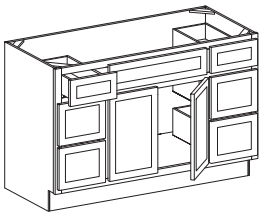

Double Door and
Six Drawer
60” Width

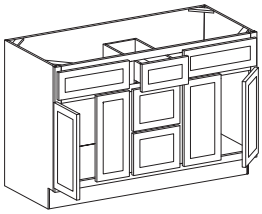

Two Double Door and
Triple Drawer
60” Width

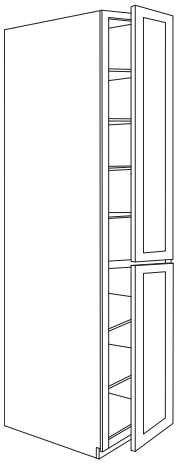

Linen Single &
Double Door
84” (6 shelves)
Single - 15” and 18” Width
Double - 24” Width

Nomenclature

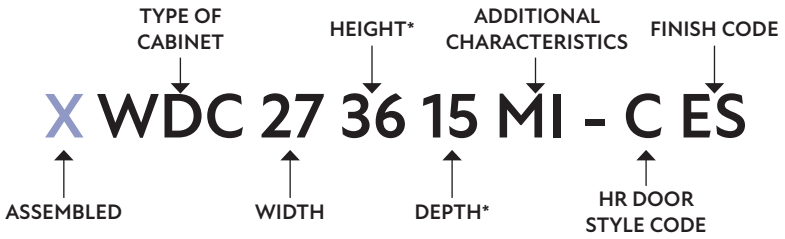

TYPE OF CABINET					
B	Base Cabinet	SAMB	Sample Base Front	VCDB	Vanity Combo Sink Drawer Cabinet
BC	Base Corner Cabinet	SAMD	Sample Base Door	VDB	Vanity Drawer Base Cabinet
BBC	Blind Base Corner Cabinet	SAMMB	Sample Mini Base	VFH	Vanity Full Height Cabinet
BFH	Base Full Height Cabinet	SB	Sink Base Cabinet	VL	Vanity Linen Closet
DB	Drawer Base Cabinet	SBF	Sink Base Farm Cabinet	VSDB	Vanity Sink Drawer Base Cabinet
KD	Knee Drawer	SFCD	Sink Front Corner Diagonal Cabinet	VSB	Vanity Sink Base Cabinet
MWB	Microwave Base Cabinet	UP	Utility Pantry Cabinet	W	Wall Cabinet
MWC	Microwave Wall Cabinet	VB	Vanity Base Cabinet	WBC	Wall Blind Cabinet
OVD	Double Oven Cabinet	VBTD	Vanity Base Top Drawer Cabinet	WDC	Wall Diagonal Corner Cabinet
OVD	Universal Oven Cabinet			WEC	Wall End Cabinet

ADDITIONAL CHARACTERISTICS	
-2	Double Drawer
-3	Triple Drawer
-6	Two Bank, Triple Drawer
L	Left hinged assembled cabinet
MI	Matching Interior
R	Right hinged assembled cabinet
X	Assembled cabinet
U	Universal

HR DOOR STYLE CODES	
H	**Hatteras** (Narrow Shaker Style)
C	**Catalina** (Wide Shaker Style)
M	**Maui** (Transitional Style)

FINISH CODES - CABINETS	
ES	Espresso
SL	Slate
SD	Sandstone
WH	Polar White
GR	Pebble Grey
SW	Shell White
SG	Sage Green
NB	Nautical Blue
UF	Unfinished

*Height will be omitted if cabinet is standard height
Standard base height = 34-1/2" • Standard base depth = 24" • Standard wall depth = 12"
Standard vanity base height = 34-1/2" • Standard vanity base depth = 21"

FINISH CODES - ACCESSORIES	
ESP	Espresso
SL	Slate
SD	Sandstone
PWH	Polar White
PGRY	Pebble Grey
SW	Shell White
SG	Sage Green
NB	Nautical Blue
UF	Unfinished

Sample part numbers:

Part Number	Item Description
BFH18-CGR	Base cabinet with full height door, 18" W x 34-1/2" H x 24" D, Catalina design in Pebble Grey finish
BBC39-42U-MWH	Base blind corner cabinet, 39"– 42" W x 34-1/2" H x 24" D, Maui design in Polar White finish
UP3090-CSL	Utility/Pantry cabinet, 30" W x 90" H x 24" D, Catalina design in Slate finish
W3012-HES	Wall cabinet, 30" W x 12" H x 12" D, Hatteras design in Espresso finish
XDB12-3-HSL	Assembled 3-drawer base cabinet, 12" W x 34-1/2" H x 24" D, Hatteras design in Slate finish
XW1236L-CSD	Assembled wall cabinet with left hinged door, 12" W x 36" H x 24" D, Catalina design in Sandstone finish

Please Note: Some assembled cabinet part numbers are slightly different from the QuickBuild part number equivalents—check part numbers carefully when ordering.

Assembly Video Tutorials

Use the QR codes and links below to access step-by-step assembly videos

Base Cabinets
https://delivr.com/2s43x

Base Corner Cabinets
https://delivr.com/2r23p

Utility/Pantry Cabinets
https://delivr.com/29fgn

Double Oven Cabinets
https://delivr.com/28pgy

Wall Cabinets
https://delivr.com/25hbr

Wall Corner Cabinets
https://delivr.com/2d3s3

Wall End Cabinets
https://delivr.com/2krhy

Rollout Tray
https://delivr.com/2fzzv

Selection Center
https://delivr.com/2jr28

Wall-Mounted Display
https://delivr.com/238vc

Vanity Trim Kit
https://delivr.com/23n8d

NorthPoint Cabinetry Videos

NorthPoint Brand Overview
https://delivr.com/2nyhg

Anatomy of a Cabinet
https://delivr.com/2zmba

Quick Assembly
https://delivr.com/2kcwh

Wall Cabinets - Openings

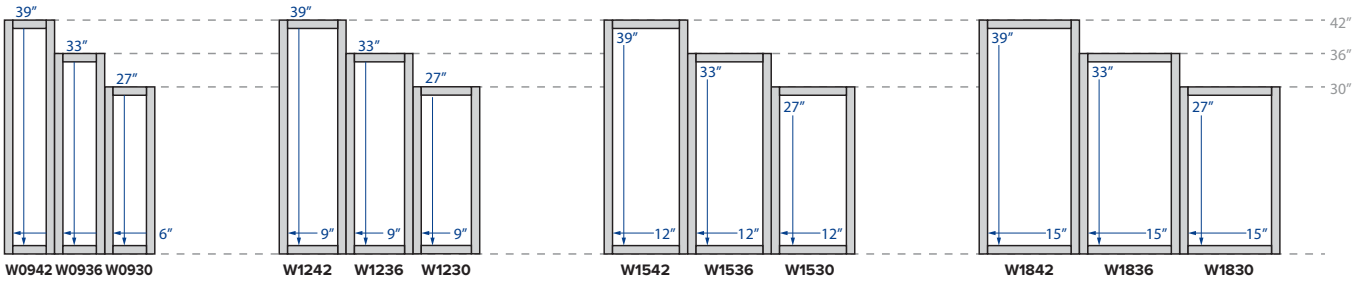

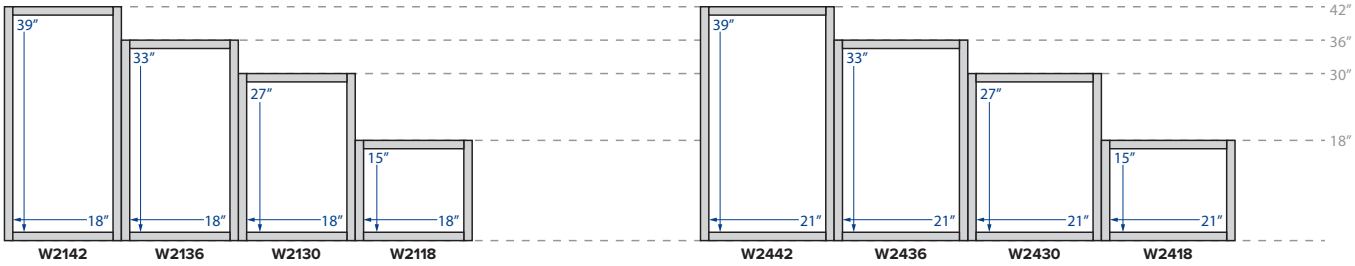

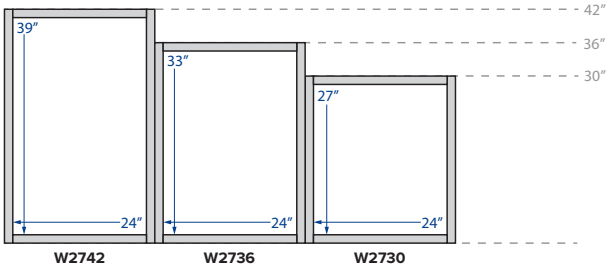

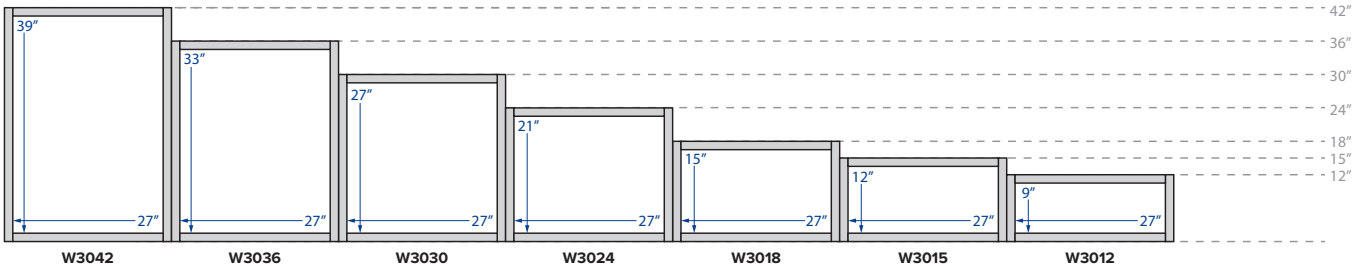

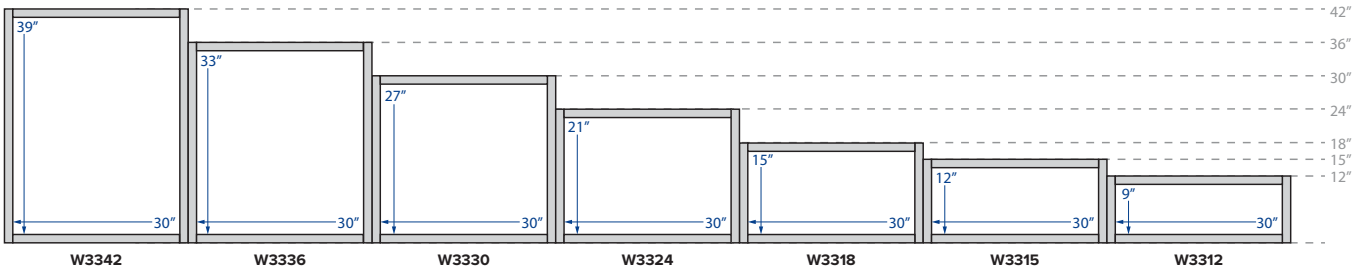

Wall Cabinets - Openings

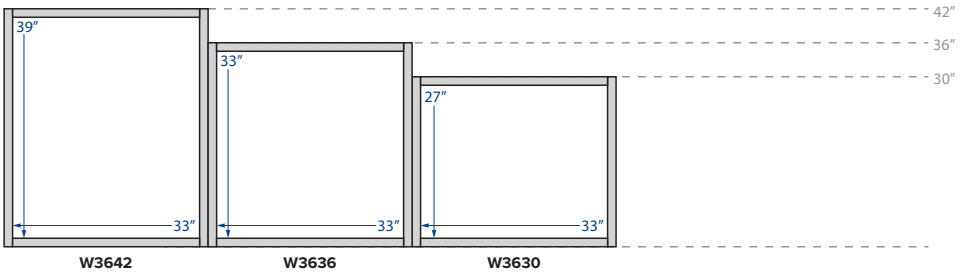

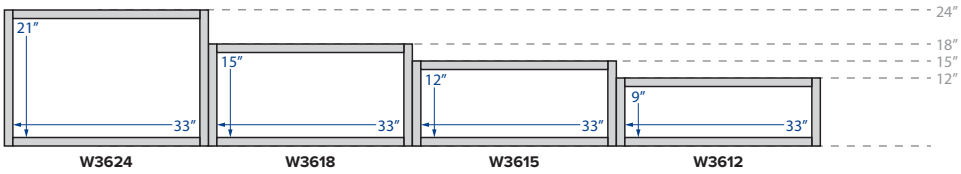

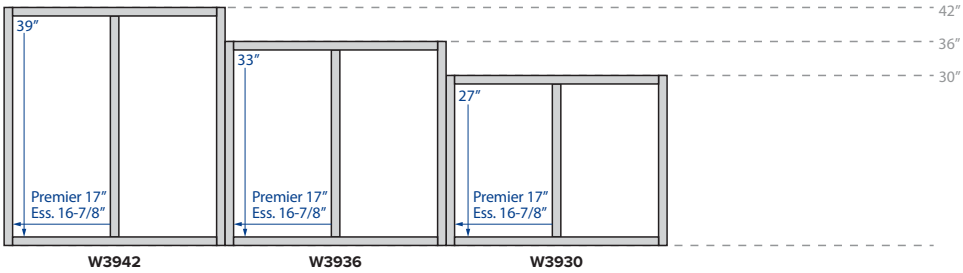

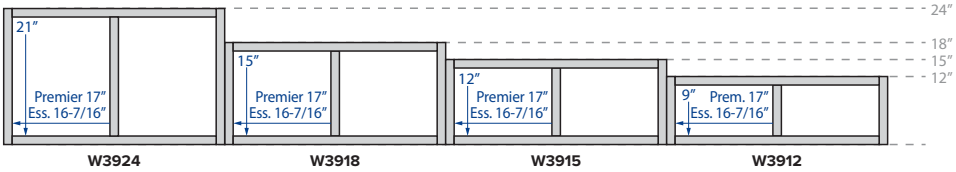

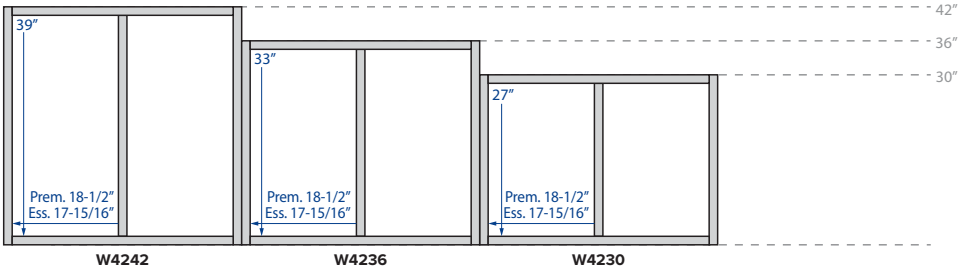

Base cabinets – openings

Pantry Cabinets - Openings

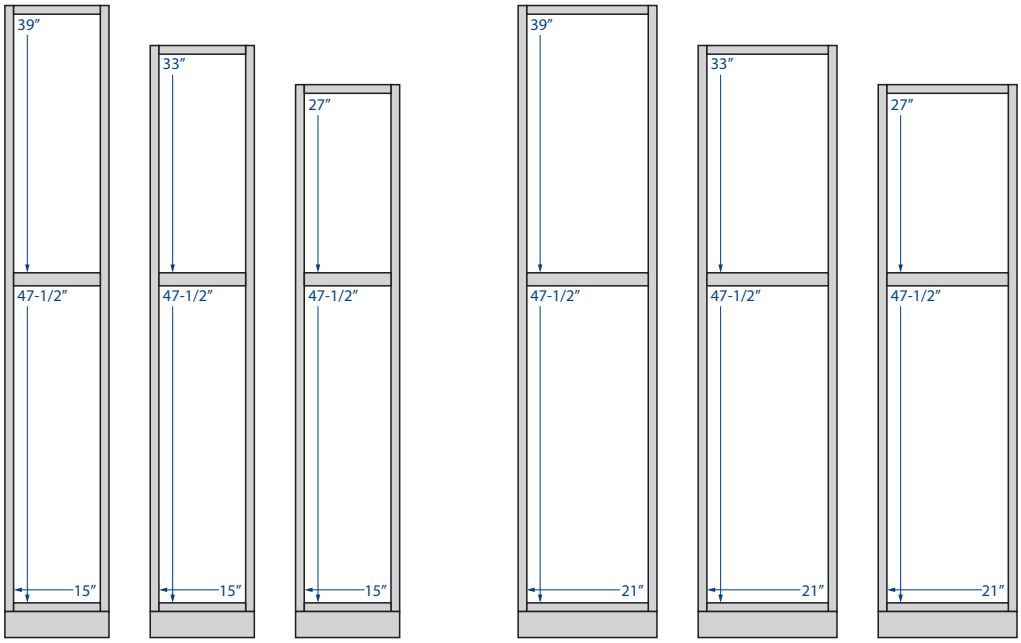

UP1896 UP1890 UP1884 UP2496 UP2490 UP2484

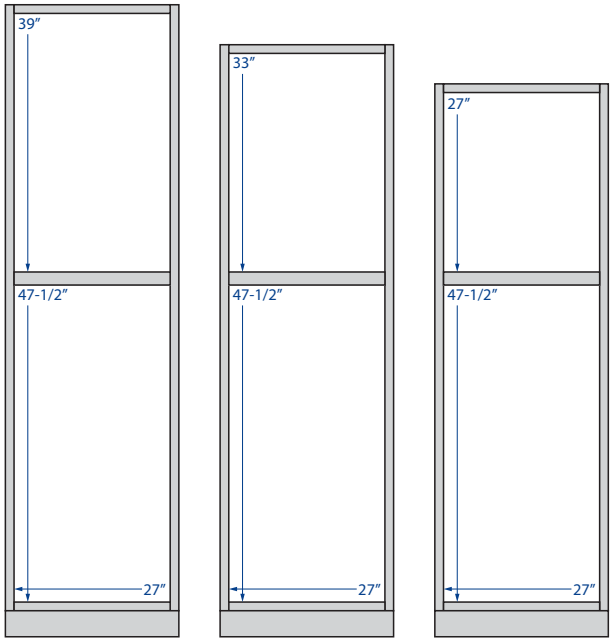

UP3096 UP3090 UP3084

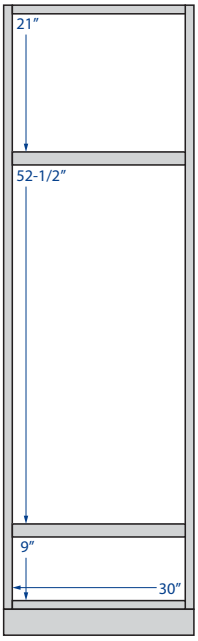

OVD3396

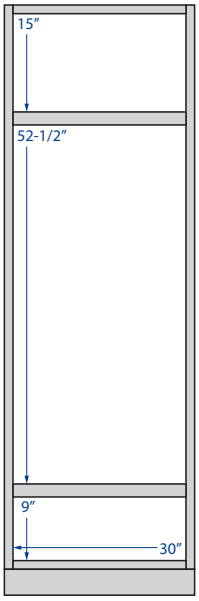

OVD3390

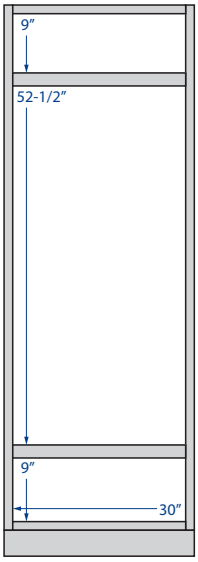

OVD3384

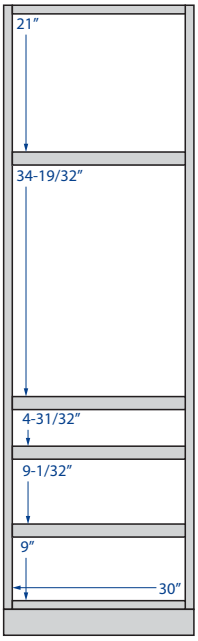

OVD3396U

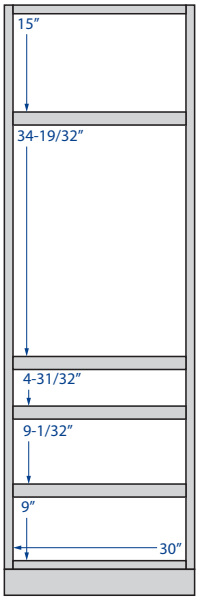

OVD3390U

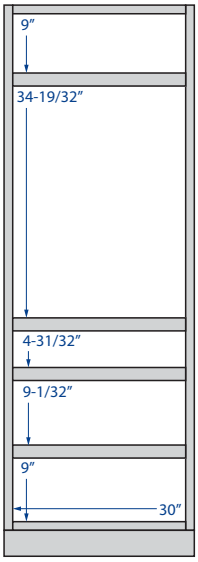

OVD3384U

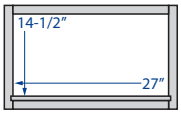

MWC3018

MWC3036

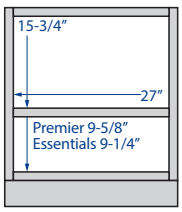

MWB30

Vanity Cabinets - Openings

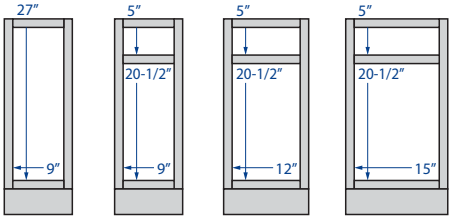

VFH12 VB12 VB15 VB18

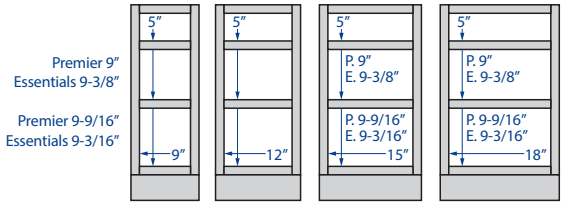

VDB12-3 VDB15-3 VDB18-3 VDB21-3

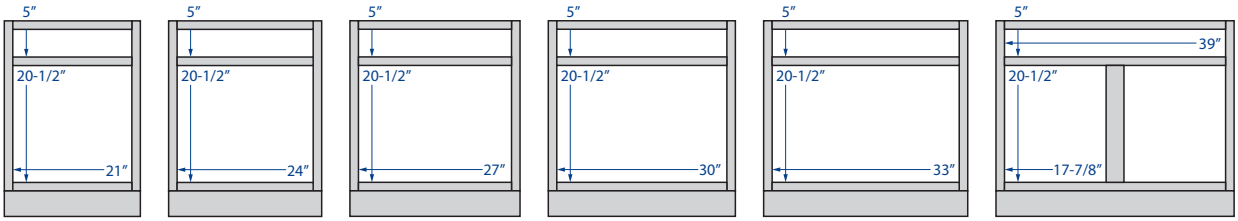

VSB24 VSB27 VSB30 VSB33 VSB36 VSB42

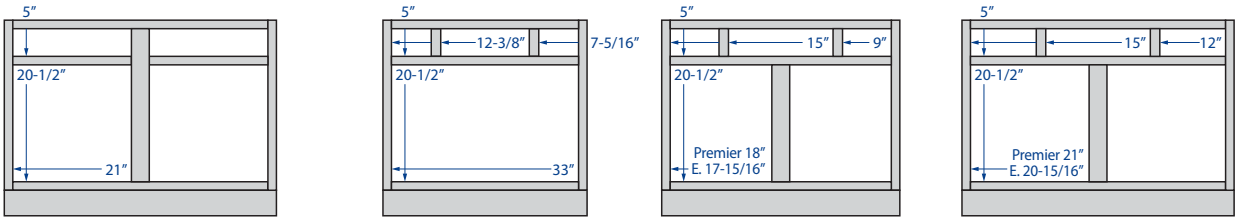

VSB48 VBTD36 VBTD42 VBTD48

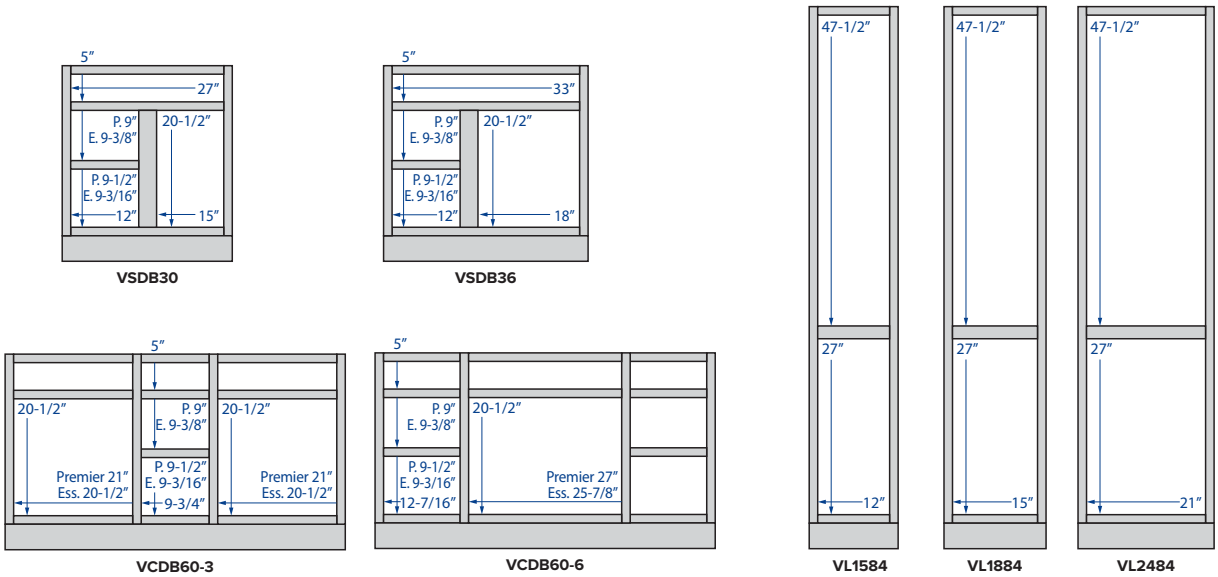

VSDB30 VSDB36 VCDB60-3 VCDB60-6 VL1584 VL1884 VL2484

12” Height cabinets

Essentials Overlay

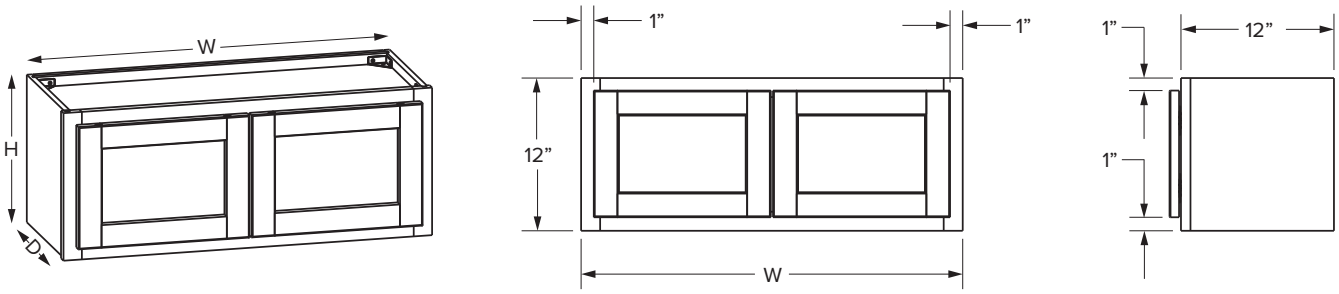

Premier Overlay

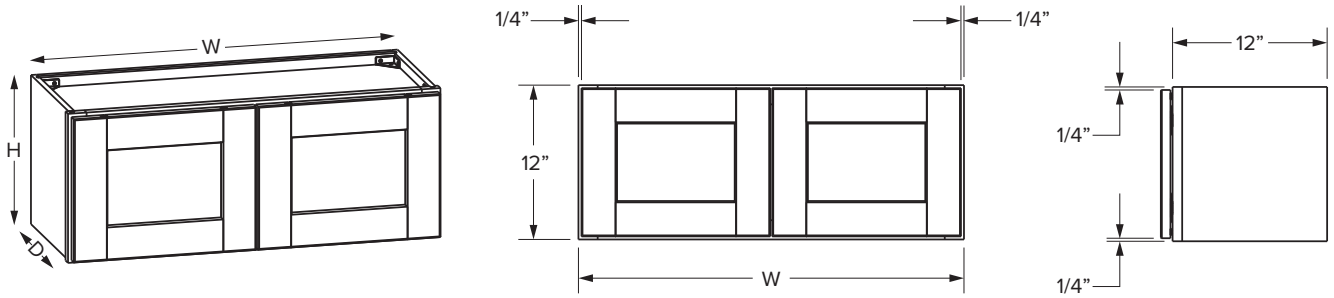

						ESSENTIALS				PREMIER			
						Opening		*Door*		*Opening*		*Door*	
SKU	**W**	**H**	**D**	**Shelves**	**# of Doors**	**Width**	**Height**	**Width**	**Height**	**Width**	**Height**	**Width**	**Height**
W3012	30”	12”	12”	0	2	27”	9”	13-29/32”	9-31/32”	27”	9”	14-11/16”	11-17/32”
W3312	33”	12”	12”	0	2	30”	9”	15-13/32”	9-31/32”	30”	9”	16-3/16”	11-17/32”
W3612	36”	12”	12”	0	2	33”	9”	16-29/32”	9-31/32”	33”	9”	17-11/16”	11-17/32”
W3912*	39”	12”	12”	0	2	16-7/16”	9”	17-17/32”	9-31/32”	17”	9”	19-1/16”	11-17/32”

*39” and 42” wide cabinets have a center stile

Wall Cabinets - Dimensions

15” Height cabinets

Essentials Overlay

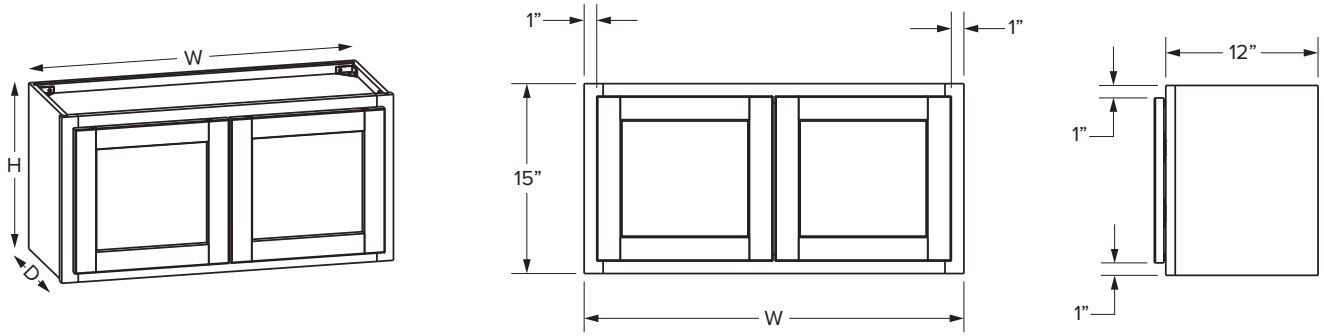

Premier Overlay

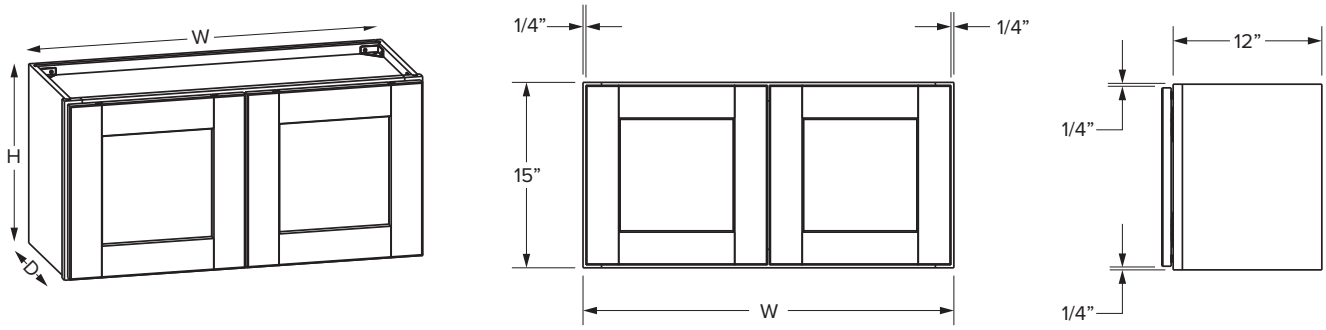

						ESSENTIALS				PREMIER			
						Opening		*Door*		*Opening*		*Door*	
SKU	**W**	**H**	**D**	**Shelves**	**# of Doors**	**Width**	**Height**	**Width**	**Height**	**Width**	**Height**	**Width**	**Height**
W3015	30”	15”	12”	0	2	27”	12”	13-29/32”	13-1/32”	27”	12”	14-11/16”	14-17/32”
W3315	33”	15”	12”	0	2	30”	12”	15-13/32”	13-1/32”	30”	12”	16-3/16”	14-17/32”
W3615	36”	15”	12”	0	2	33”	12”	16-29/32”	13-1/32”	33”	12”	17-11/16”	14-17/32”
W3915*	39”	15”	12”	0	2	16-7/16”	12”	17-17/32”	13-1/32”	17”	12”	19-1/16”	14-17/32”

*39” and 42” wide cabinets have a center stile

18” Height cabinets

Essentials Overlay

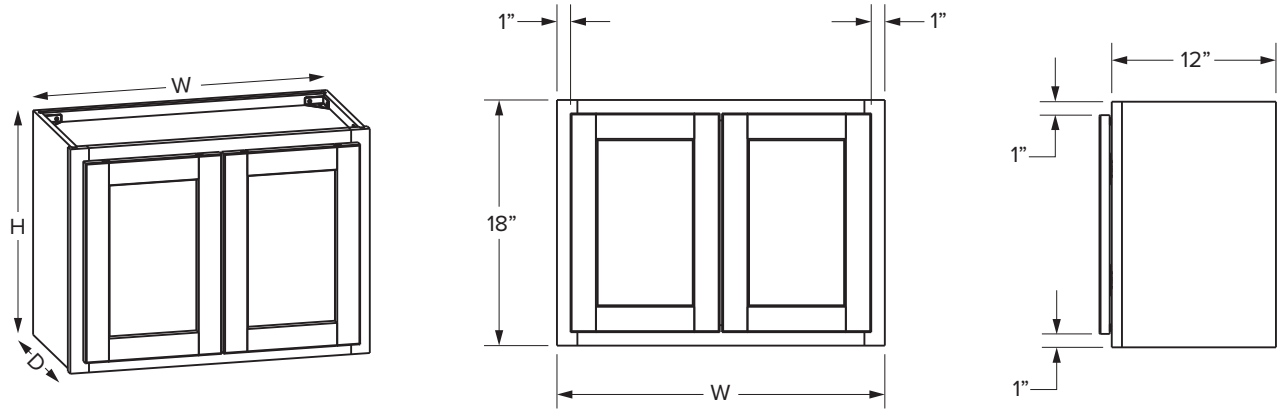

Premier Overlay

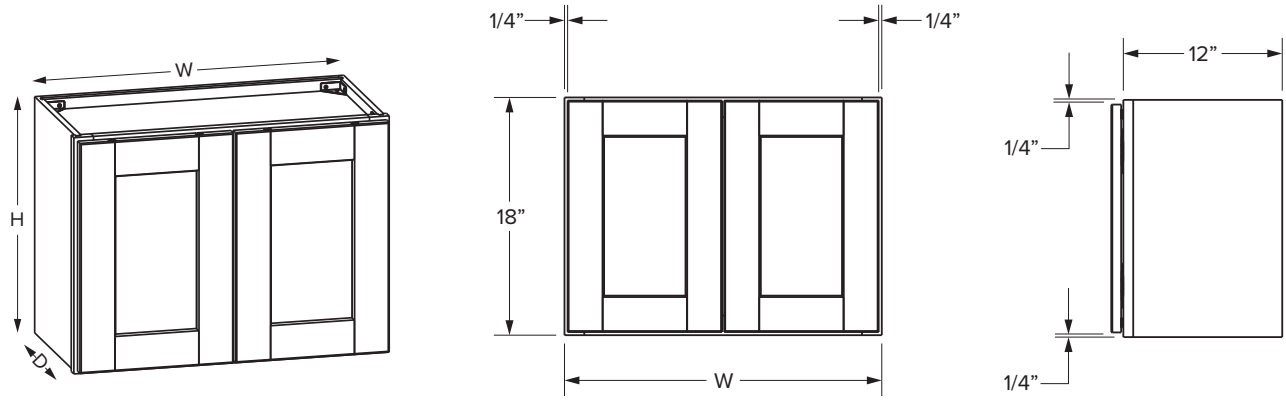

						ESSENTIALS				PREMIER			
						Opening		*Door*		*Opening*		*Door*	
SKU	W	H	D	Shelves	# of Doors	Width	Height	Width	Height	Width	Height	Width	Height
W2118†	21”	18”	12”	0	1	18”	15”	18-15/16”	16-1/32”	18”	15”	20-1/2”	17-17/32”
W2418	24”	18”	12”	0	2	21”	15”	10-7/8”	16-1/32”	21”	15”	11-11/16”	17-17/32”
W3018	30”	18”	12”	0	2	27”	15”	13-29/32”	16-1/32”	27”	15”	14-11/16”	17-17/32”
W3318	33”	18”	12”	0	2	30”	15”	15-13/32”	16-1/32”	30”	15”	16-3/16”	17-17/32”
W3618	36”	18”	12”	0	2	33”	15”	16-29/32”	16-1/32”	33”	15”	17-11/16”	17-17/32”
W3918*	39”	18”	12”	0	2	16-7/16”	15”	17-17/32”	16-1/32”	17”	15”	19-1/16”	17-17/32”

†W2118 is single door cabinet
*39” and 42” wide cabinets have a center stile

Wall Cabinets - Dimensions

24” Height cabinets

Essentials Overlay

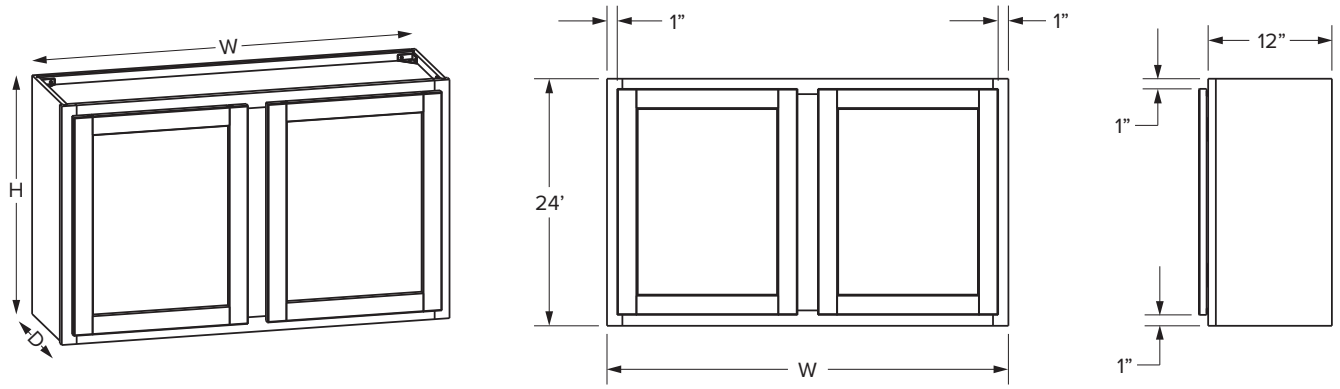

Premier Overlay

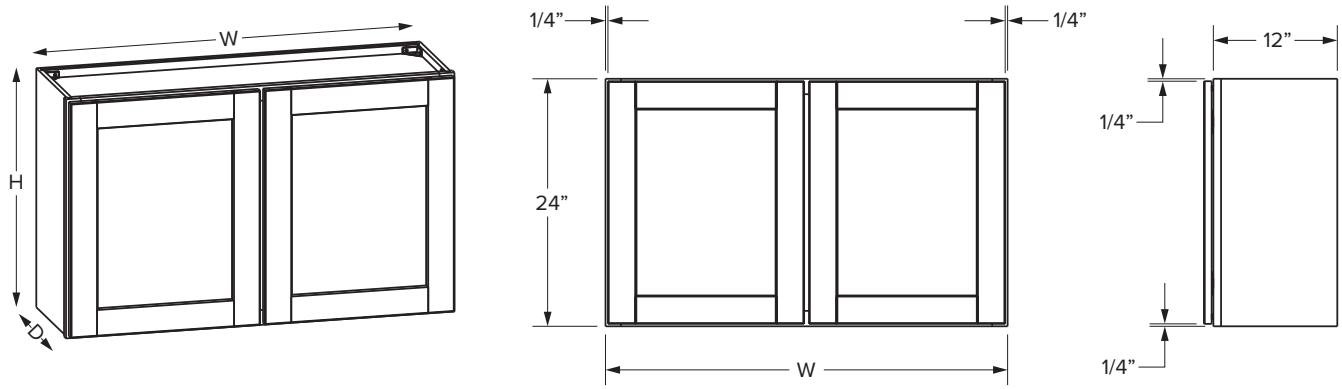

						ESSENTIALS				PREMIER			
						Opening		*Door*		*Opening*		*Door*	
SKU	**W**	**H**	**D**	**Shelves**	**# of Doors**	**Width**	**Height**	**Width**	**Height**	**Width**	**Height**	**Width**	**Height**
W3024	30”	24”	12”	1	2	27”	21”	13-29/32”	21-31/32”	27”	21”	14-11/16”	23-17/32”
W3324	33”	24”	12”	1	2	30”	21”	15-13/32”	21-31/32”	30”	21”	16-3/16”	23-17/32”
W3624	36”	24”	12”	1	2	33”	21”	16-29/32”	21-31/32”	33”	21”	17-11/16”	23-17/32”
W3924*	39”	24”	12”	1	2	16-7/16”	21”	17-17/32”	21-31/32”	17”	21”	19-1/16”	23-17/32”

*39” and 42” wide cabinets have a center stile

24” Deep cabinets

Essentials Overlay

18” High

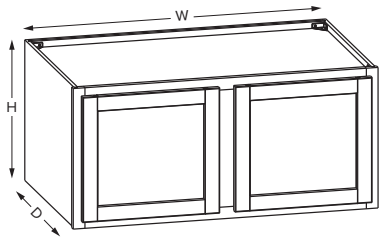

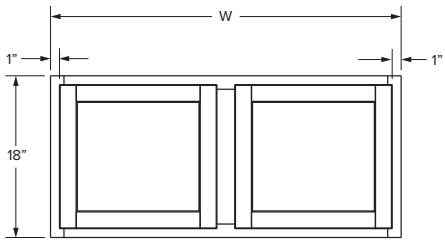

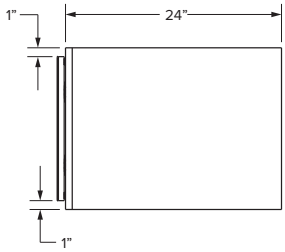

24” High

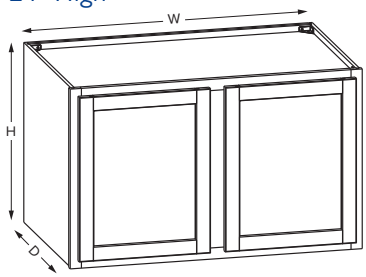

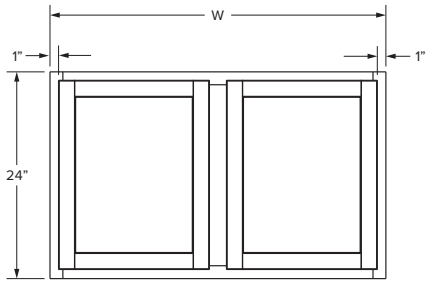

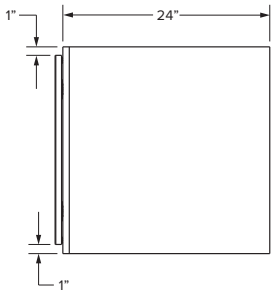

Premier Overlay

18” High

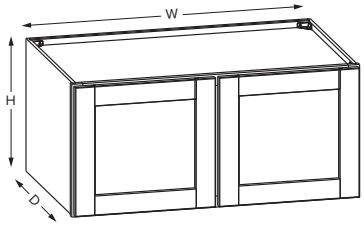

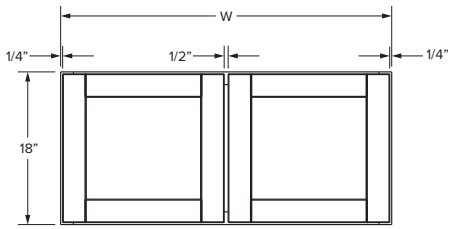

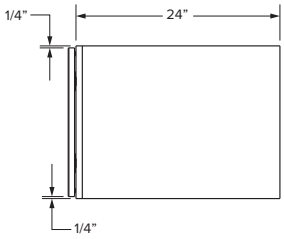

24” High

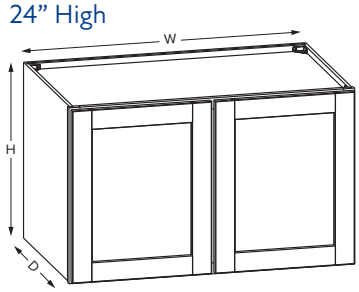

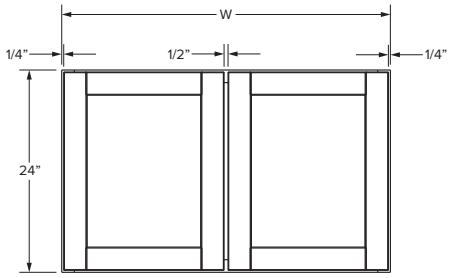

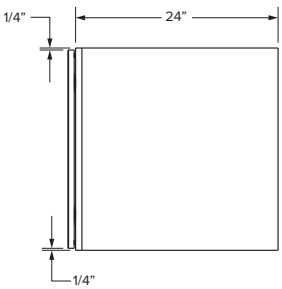

						ESSENTIALS				PREMIER			
						Opening		*Door*		*Opening*		*Door*	
SKU	**W**	**H**	**D**	**Shelves**	**# of Doors**	**Width**	**Height**	**Width**	**Height**	**Width**	**Height**	**Width**	**Height**
W361824	36”	18”	24”	0	2	33”	15”	16-29/32”	16-1/32”	33”	15”	17-11/16”	17-9/16”
W391824*	39”	18”	24”	0	2	16-15/16”	15”	17-17/32”	16-1/32”	16-15/16”	15”	19-1/16”	17-9/16”
W362424	36”	24”	24”	1	2	33”	21”	16-29/32”	21-31/32”	33”	21”	17-11/16”	23-9/16”
W392424*	39”	24”	24”	1	2	16-15/16”	21”	17-17/32”	21-31/32”	16-15/16”	21”	19-1/16”	23-9/16”

*39” and 42” wide cabinets have a center stile

Wall Cabinets - Dimensions

30” Height cabinets

Essentials overlay

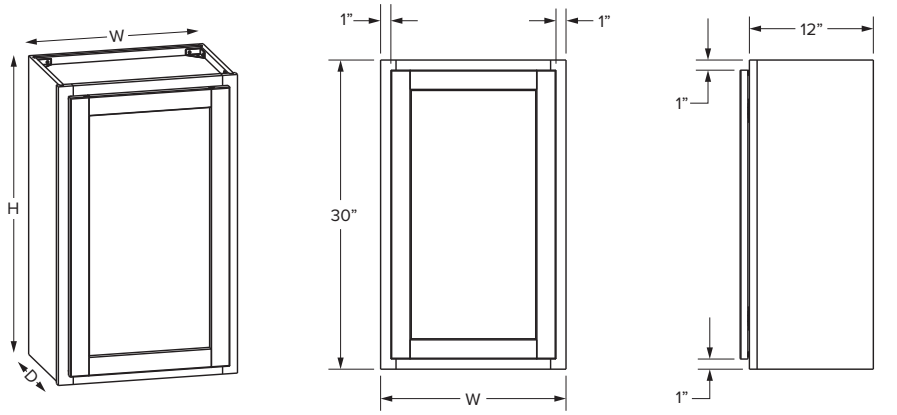

Double Door

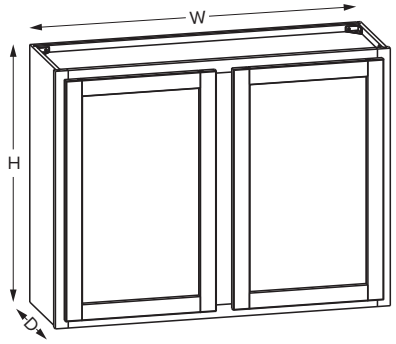

Premier overlay

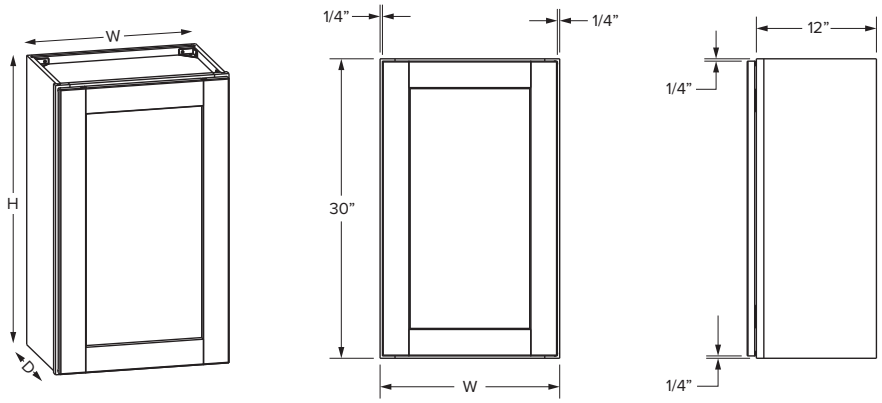

Double Door

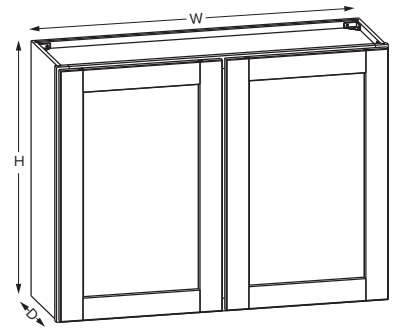

SKU Assembled / Unassembled	W	H	D	Shelves	# of Doors	ESSENTIALS Opening Width	ESSENTIALS Opening Height	ESSENTIALS Door Width	ESSENTIALS Door Height	PREMIER Opening Width	PREMIER Opening Height	PREMIER Door Width	PREMIER Door Height
XW0930**L/R**¥ / W0930	9”	30”	12”	2	1	6”	27”	7-1/32”	28-1/32”	6”	27”	8-17/32”	29-17/32”
XW1230**L/R**¥ / W1230	12”	30”	12”	2	1	9”	27”	10-1/32”	28-1/32”	9”	27”	11-17/32”	29-17/32”
XW1530**L/R**¥ / W1530	15”	30”	12”	2	1	12”	27”	13-1/32”	28-1/32”	12”	27”	14-17/32”	29-17/32”
XW1830**L/R**¥ / W1830	18”	30”	12”	2	1	15”	27”	16-1/32”	28-1/32”	15”	27”	17-17/32”	29-17/32”
XW2130**L/R**¥ / W2130	21”	30”	12”	2	1	18”	27”	19-1/32”	28-1/32”	18”	27”	20-17/32”	29-17/32”
W2430	24”	30”	12”	2	2	21”	27”	10-15/16”	28-1/32”	21”	27”	11-11/16”	29-17/32”
W2730	27”	30”	12”	2	2	24”	27”	12-7/16”	28-1/32”	24”	27”	13-3/16”	29-17/32”
W3030	30”	30”	12”	2	2	27”	27”	13-29/32”	28-1/32”	27”	27”	14-11/16”	29-17/32”
W3330	33”	30”	12”	2	2	30”	27”	15-13/32”	28-1/32”	30”	27”	16-3/16”	29-17/32”
W3630	36”	30”	12”	2	2	33”	27”	16-29/32”	28-1/32”	33”	27”	17-11/16”	29-17/32”
W3930*	39”	30”	12”	2	2	16-7/16”	27”	17-17/32”	28-1/32”	17”	27”	19-1/32”	29-17/32”
W4230*	42”	30”	12”	2	2	17-15/16”	27”	19-1/32”	28-1/32”	18-1/2”	27”	20-17/32”	29-17/32”

*39” and 42” wide cabinets have a center stile

¥ Hinged left (L) or hinged right (R) designation is required for assembled single-door wall cabinets. Please add to the part number before the finish code.

30” Height glass door cabinets

Premier Overlay - Single Door

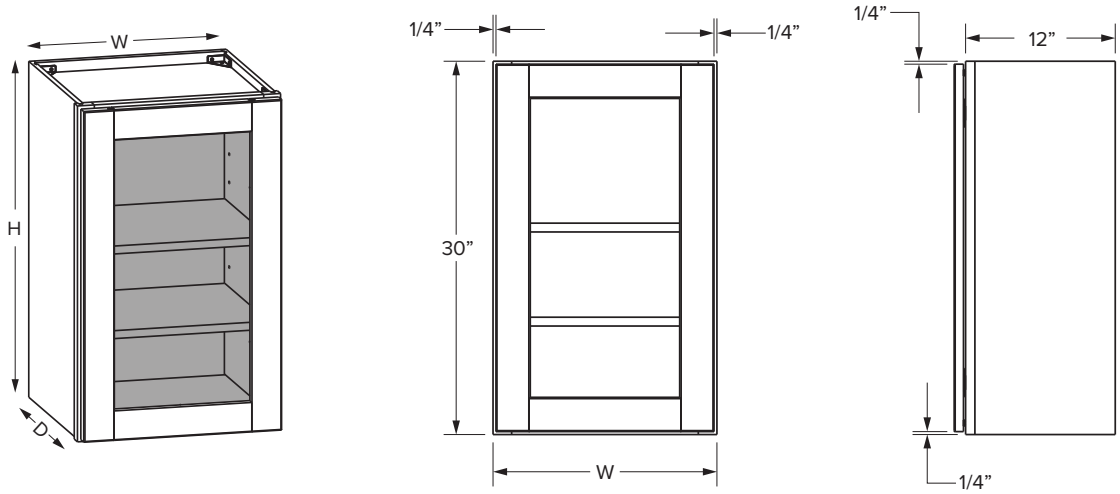

Premier Overlay - Double Door

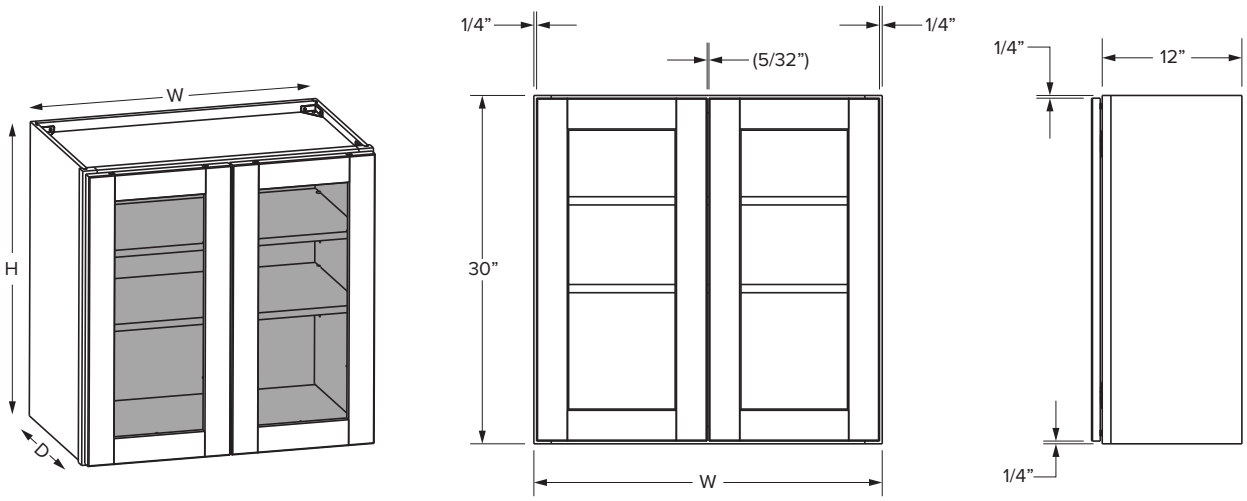

SKU Assembled / Unassembled	W	H	D	Shelves	# of Doors	PREMIER Opening Width	PREMIER Opening Height	PREMIER Door Width	PREMIER Door Height
XW1530MI**L/R**¥ / W1530MI	15”	30”	12”	2	1	12”	27”	14-17/32”	29-17/32”
XW1830MI**L/R**¥ / W1830MI	18”	30”	12”	2	1	15”	27”	17-17/32”	29-17/32”
W3030MI	30”	30”	12”	2	2	27”	27”	14-11/16”	29-17/32”
W3630MI	36”	30”	12”	2	2	33”	27”	17-11/16”	29-17/32”

¥ Hinged left (L) or hinged right (R) designation is required for assembled single-door wall cabinets. Please add to the part number before the finish code.

Wall Cabinets - Dimensions

36” Height cabinets

Essentials overlay

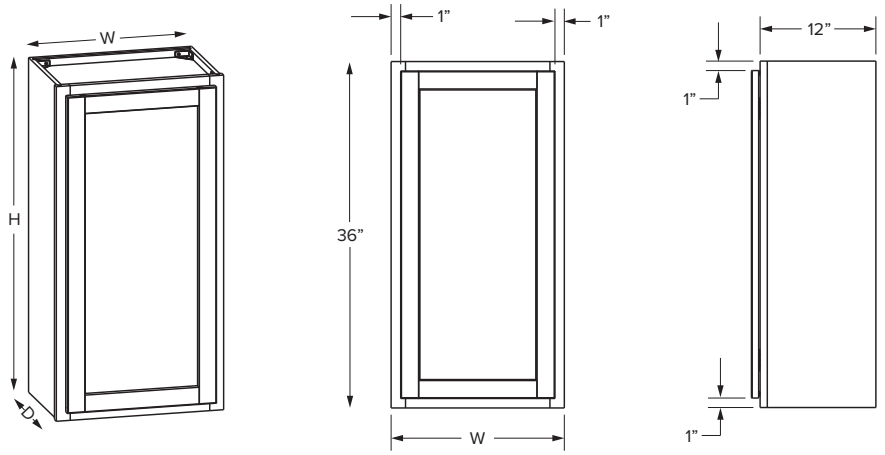

Double Door

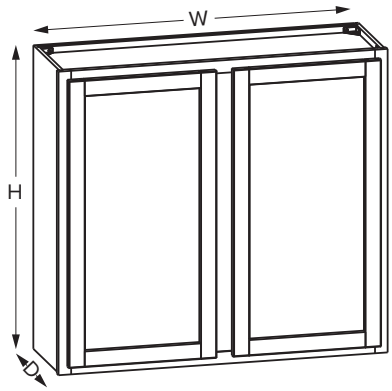

Premier overlay

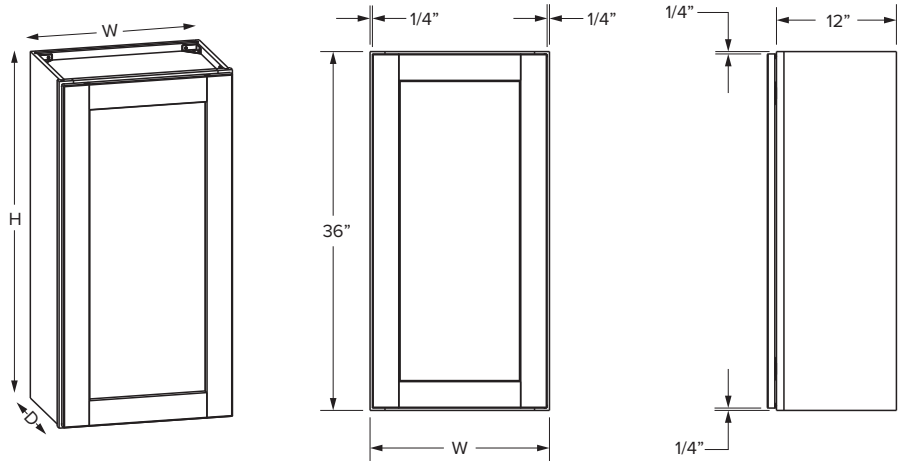

Double Door

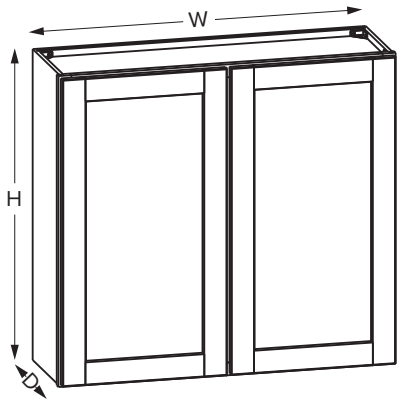

SKU Assembled / Unassembled	W	H	D	Shelves	# of doors	ESSENTIALS Opening Width	ESSENTIALS Opening Height	ESSENTIALS Door Width	ESSENTIALS Door Height	PREMIER Opening Width	PREMIER Opening Height	PREMIER Door Width	PREMIER Door Height
XW0936**L/R**¥ / W0936	9”	36”	12”	2	1	6”	33”	7-1/32”	34-1/32”	6”	33”	8-17/32”	35-17/32”
XW1236**L/R**¥ / W1236	12”	36”	12”	2	1	9”	33”	10-1/32”	34-1/32”	9”	33”	11-17/32”	35-17/32”
XW1536**L/R**¥ / W1536	15”	36”	12”	2	1	12”	33”	13-1/32”	34-1/32”	12”	33”	14-17/32”	35-17/32”
XW1836**L/R**¥ / W1836	18”	36”	12”	2	1	15”	33”	16-1/32”	34-1/32”	15”	33”	17-17/32”	35-17/32”
XW2136**L/R**¥ / W2136	21”	36”	12”	2	1	18”	33”	19-1/32”	34-1/32”	18”	33”	20-17/32”	35-17/32”
W2436	24”	36”	12”	2	2	21”	33”	10-15/16”	34-1/32”	21”	33”	11-11/16”	35-17/32”
W2736	27”	36”	12”	2	2	24”	33”	12-7/16”	34-1/32”	24”	33”	13-3/16”	35-17/32”
W3036	30”	36”	12”	2	2	27”	33”	13-29/32”	34-1/32”	27”	33”	14-11/16”	35-17/32”
W3336	33”	36”	12”	2	2	30”	33”	15-15/32”	34-1/32”	30”	33”	16-3/16”	35-17/32”
W3636	36”	36”	12”	2	2	33”	33”	16-29/32”	34-1/32”	33”	33”	17-11/16”	35-17/32”
W3936*	39”	36”	12”	2	2	16-7/16”	33”	17-17/32”	34-1/32”	17”	33”	19-1/32”	35-17/32”
W4236*	42”	36”	12”	2	2	17-15/16”	33”	19-1/32”	34-1/32”	18-1/2”	33”	20-17/32”	35-17/32”

*39” and 42” wide cabinets have a center stile

¥ Hinged left (L) or hinged right (R) designation is required for assembled single-door wall cabinets. Please add to the part number before the finish code.

36” Height glass door cabinets

Premier Overlay - Single Door

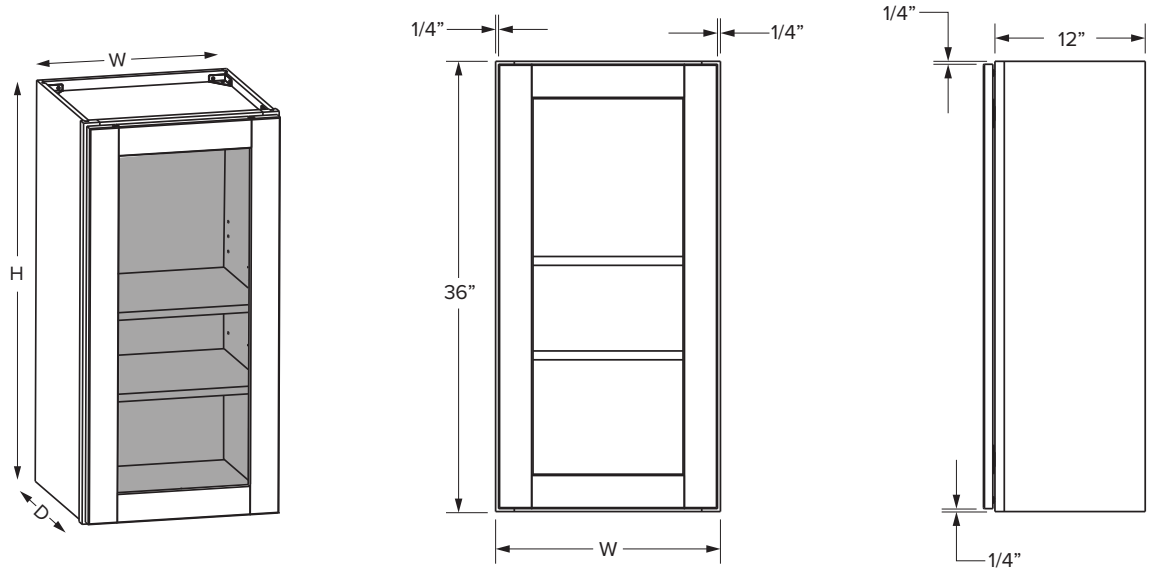

Premier Overlay - Double Door

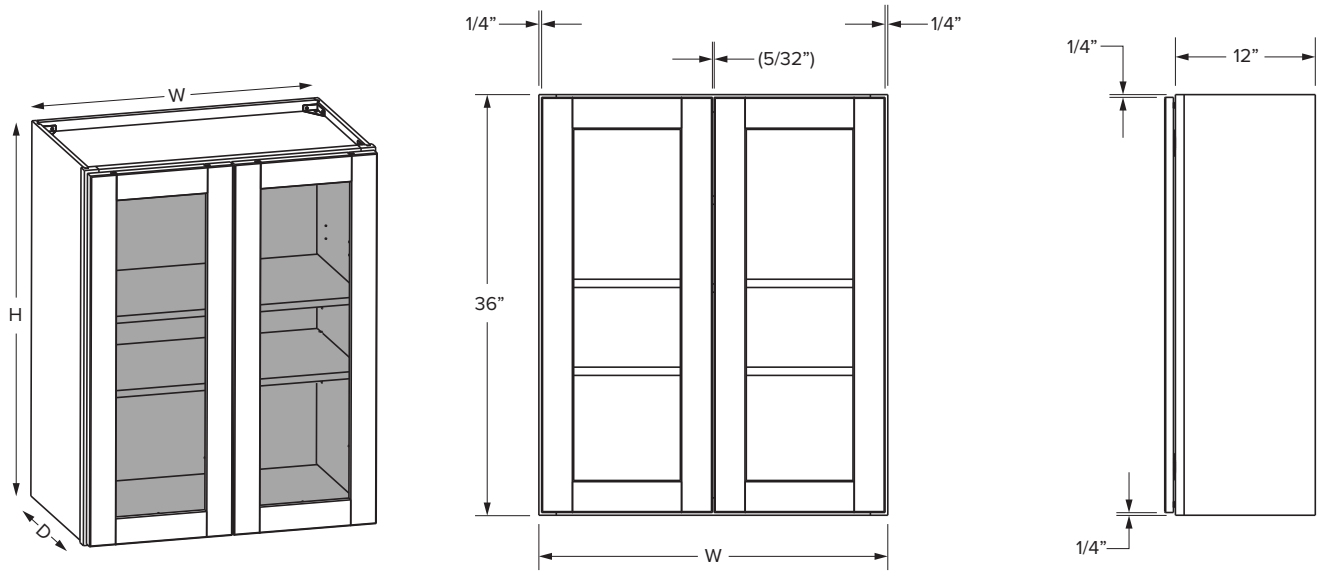

SKU Assembled / Unassembled	W	H	D	Shelves	# of Doors	PREMIER Opening Width	PREMIER Opening Height	PREMIER Door Width	PREMIER Door Height
XW1536MI**L/R**[x] / W1536MI	15”	36”	12”	2	1	12”	33”	14-17/32”	35-17/32”
XW1836MI**L/R**[x] / W1836MI	18”	36”	12”	2	1	15”	33”	17-17/32”	35-17/32”
W3036MI	30”	36”	12”	2	2	27”	33”	14-11/16”	35-17/32”
W3636MI	36”	36”	12”	2	2	33”	33”	17-11/16”	35-17/32”

[x] Hinged left (L) or hinged right (R) designation is required for assembled single-door wall cabinets. Please add to the part number before the finish code.

Wall Cabinets - Dimensions

42” Height cabinets

Essentials overlay

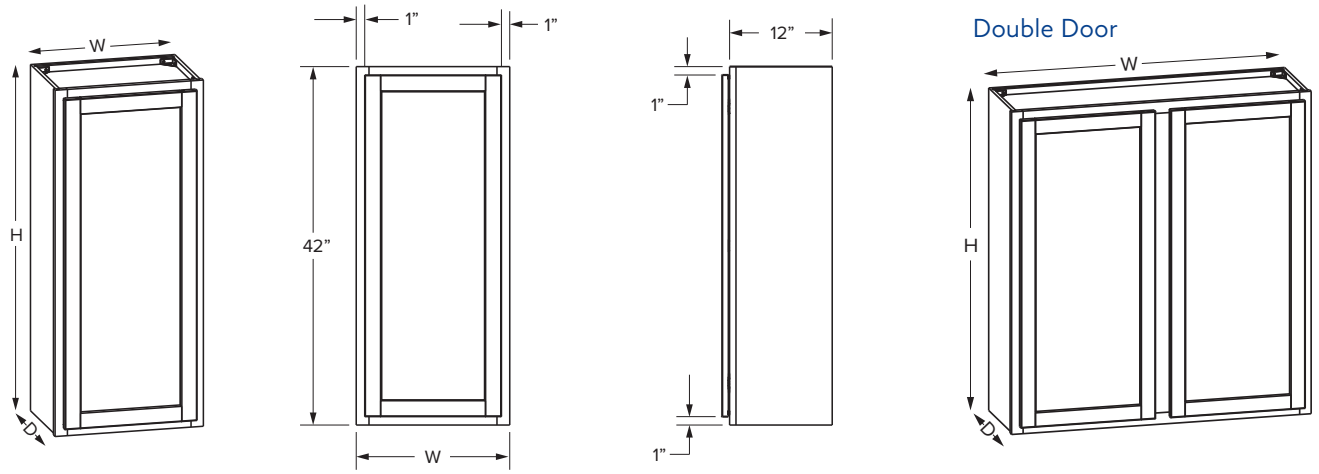

Premier overlay

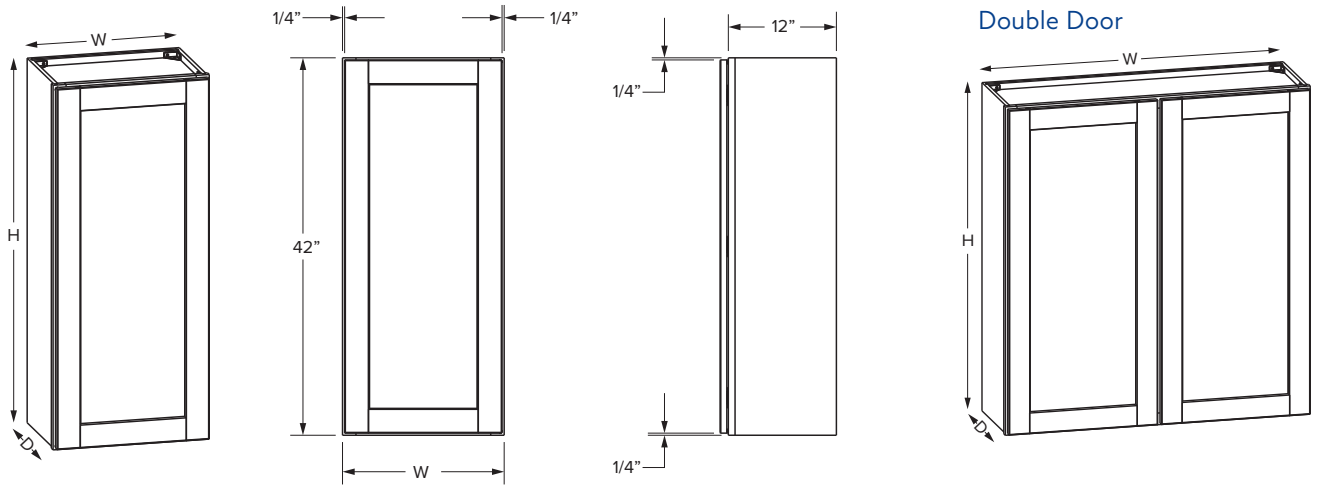

SKU Assembled / Unassembled	W	H	D	Shelves	# of doors	ESSENTIALS Opening Width	ESSENTIALS Opening Height	ESSENTIALS Door Width	ESSENTIALS Door Height	PREMIER Opening Width	PREMIER Opening Height	PREMIER Door Width	PREMIER Door Height
XW0942**L/R**[¥] / W0942	9”	42”	12”	3	1	6”	39”	7-1/32”	40-1/32”	6”	39”	8-17/32”	41-17/32”
XW1242**L/R**[¥] / W1242	12”	42”	12”	3	1	9”	39”	10-1/32”	40-1/32”	9”	39”	11-17/32”	41-17/32”
XW1542**L/R**[¥] / W1542	15”	42”	12”	3	1	12”	39”	13-1/32”	40-1/32”	12”	39”	14-17/32”	41-17/32”
XW1842**L/R**[¥] / W1842	18”	42”	12”	3	1	15”	39”	16-1/32”	40-1/32”	15”	39”	17-17/32”	41-17/32”
XW2142**L/R**[¥] / W2142	21”	42”	12”	3	1	18”	39”	19-1/32”	40-1/32”	18”	39”	20-17/32”	41-17/32”
W2442	24”	42”	12”	3	2	21”	39”	10-15/16”	40-1/32”	21”	39”	11-11/16”	41-17/32”
W2742	27”	42”	12”	3	2	24”	39”	12-7/16”	40-1/32”	24”	39”	13-3/16'	41-17/32”
W3042	30”	42”	12”	3	2	27”	39”	13-29/32”	40-1/32”	27”	39”	14-11/16”	41-17/32”
W3342	33”	42”	12”	3	2	30”	39”	15-13/32”	40-1/32”	30”	39”	16-3/16”	41-17/32”
W3642	36”	42”	12”	3	2	33”	39”	16-29/32”	40-1/32”	33”	39”	17-11/16”	41-17/32”
W3942*	39”	42”	12”	3	2	16-7/16”	39”	17-17/32”	40-1/32”	17”	39”	19-1/32”	41-17/32”
W4242*	42”	42”	12”	3	2	17-15/16”	39”	19-1/32”	40-1/32”	18-1/2”	39”	20-17/32”	41-17/32”

*39” and 42” wide cabinets have a center stile

[¥] Hinged left (L) or hinged right (R) designation is required for assembled single-door wall cabinets. Please add to the part number before the finish code.

42” Height glass door cabinets

Premier Overlay - Single Door

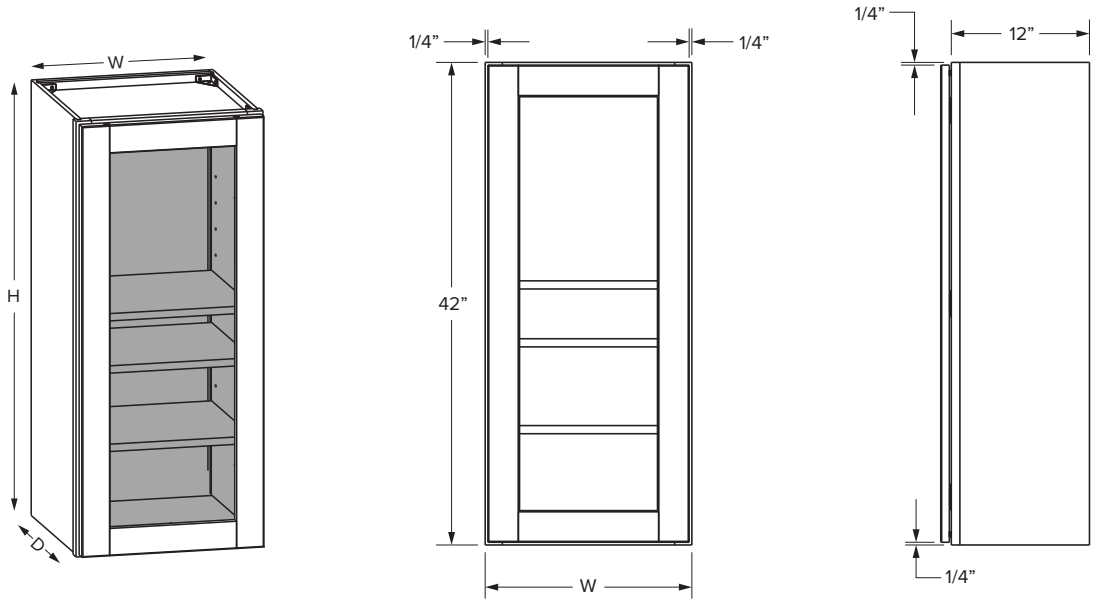

Premier Overlay - Double Door

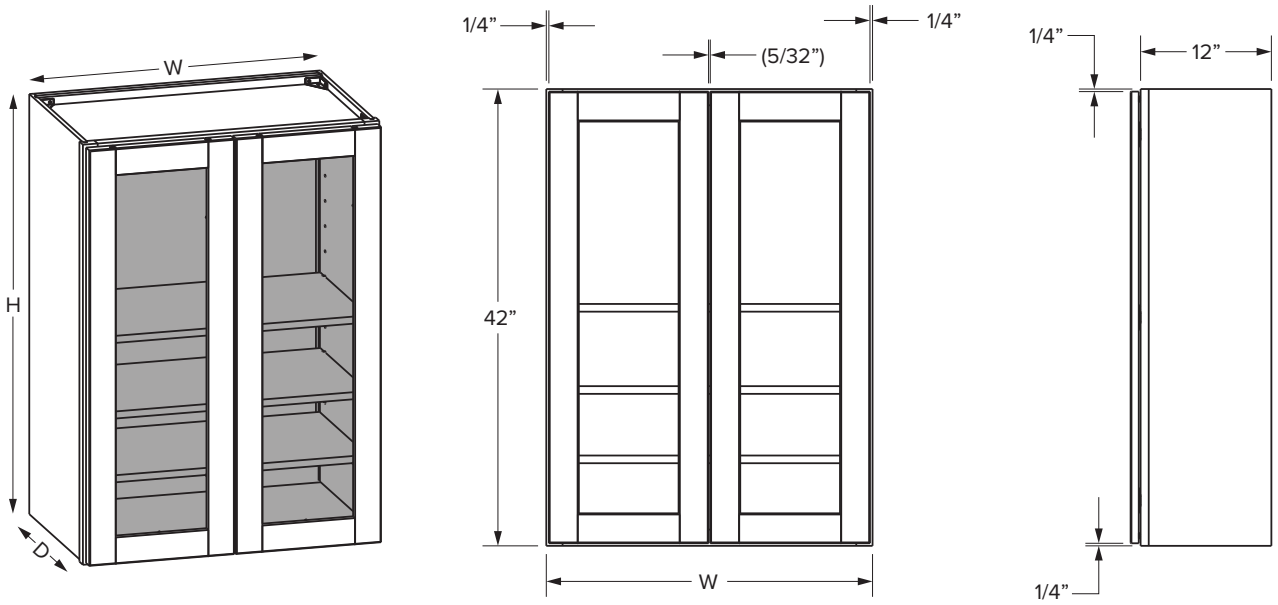

SKU Assembled / Unassembled	W	H	D	Shelves	# of Doors	PREMIER Opening Width	PREMIER Opening Height	PREMIER Door Width	PREMIER Door Height
XW1542MI**L/R**[¥] / W1542MI	15”	42”	12”	3	1	12”	39”	14-17/32”	41-17/32””
XW1842MI**L/R**[¥] / W1842MI	18”	42”	12”	3	1	15”	39”	17-17/32”	41-17/32”
W3042MI	30”	42”	12”	3	2	27”	39”	14-11/16”	41-17/32”
W3642MI	36”	42”	12”	3	2	33”	39”	17-11/16”	41-17/32”

[¥] Hinged left (L) or hinged right (R) designation is required for assembled single-door wall cabinets.
Please add to the part number before the finish code.

End cabinets

Essentials Overlay

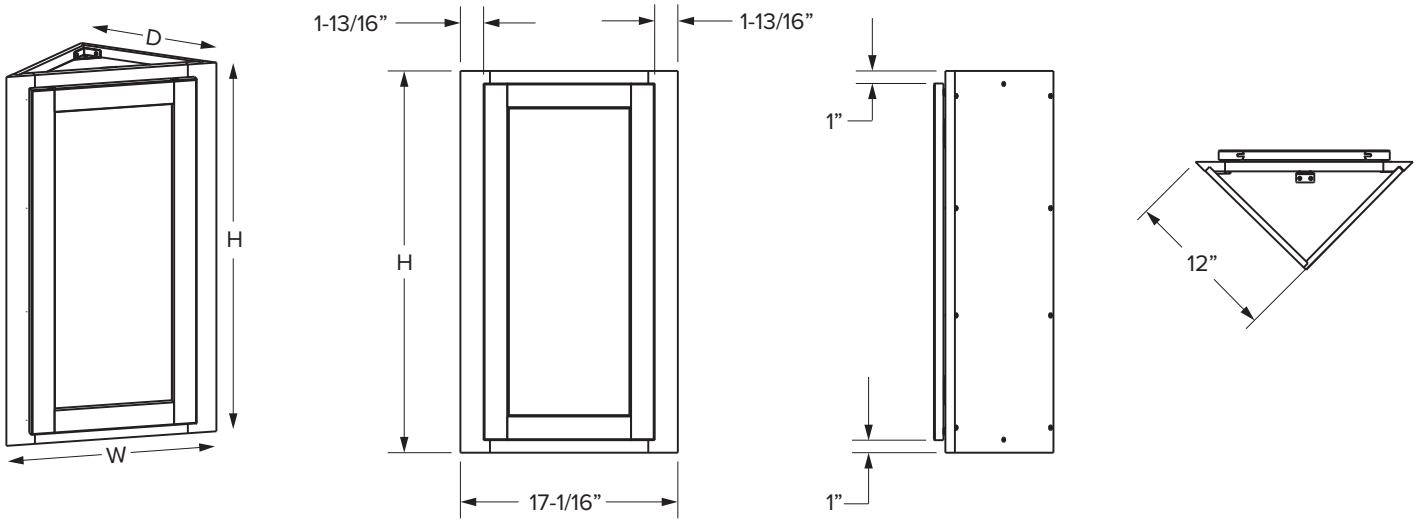

Premier Overlay

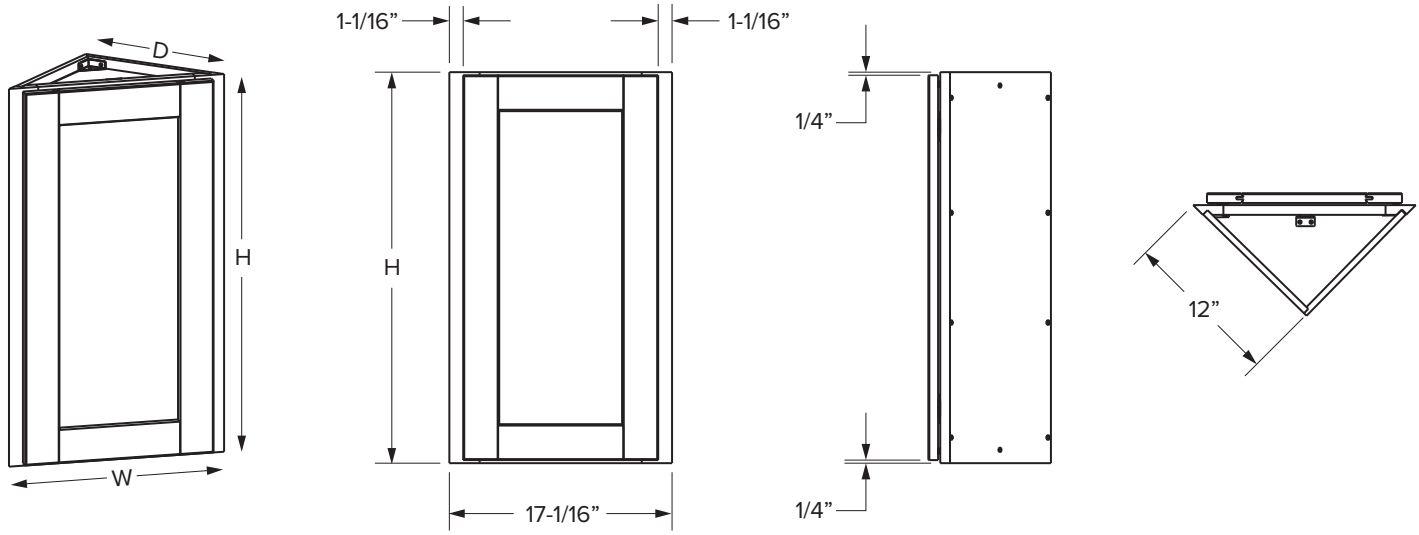

SKU Assembled / Unassembled	W	H	D	Shelves	# of Doors	ESSENTIALS Opening Width	ESSENTIALS Opening Height	ESSENTIALS Door Width	ESSENTIALS Door Height	PREMIER Opening Width	PREMIER Opening Height	PREMIER Door Width	PREMIER Door Height
XWEC1230**L/R**[¥] / WEC1230	17-1/16”	30”	12”	2	1	12-5/16”	27	13-7/16”	28-1/32”	12-5/16”	27”	14-31/32”	29-17/32”
XWEC1236**L/R**[¥] / WEC1236	17-1/16”	36”	12”	2	1	12-5/16”	33”	13-7/16”	34-1/32”	12-5/16”	33”	14-31/32”	35-17/32”
XWEC1242**L/R**[¥] / WEC1242	17-1/16”	42”	12”	3	1	12-5/16”	39”	13-7/16”	40-1/32”	12-5/16”	39”	14-31/32”	41-17/32”

[¥] Hinged left (L) or hinged right (R) designation is required for assembled single-door wall cabinets.
Please add to the part number before the finish code.

Universal blind corner cabinets

Essentials Overlay

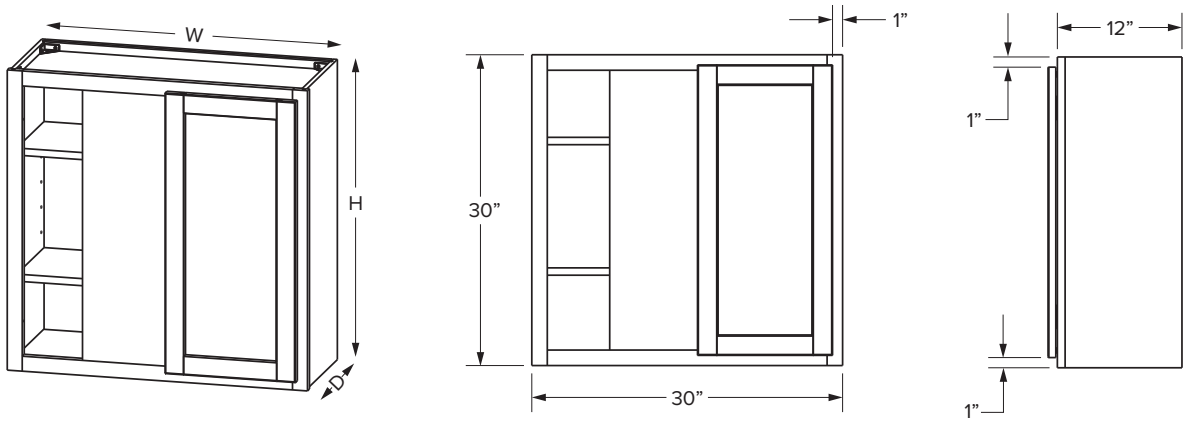

Premier Overlay

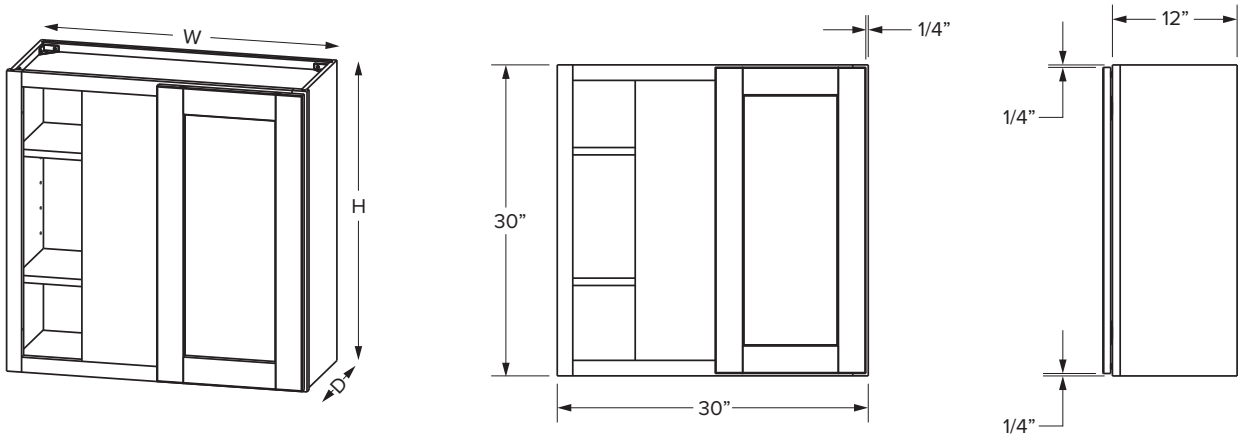

SKU Assembled / Unassembled	W	H	D	Shelves	# of Doors	ESSENTIALS Opening Width	ESSENTIALS Opening Height	ESSENTIALS Door Width	ESSENTIALS Door Height	PREMIER Opening Width	PREMIER Opening Height	PREMIER Door Width	PREMIER Door Height
XWBC30-30**L/R**[¥] / WBC30-3330U	30”–33”	30”	12”	2	1	12”	27”	13-1/32”	28-1/32”	12”	27”	14-17/32”	29-17/32”
XWBC30-36**L/R**[¥] / WBC30-3336U	30”–33”	36”	12”	2	1	12”	33”	13-1/32”	34-1/32”	12”	33”	14-17/32”	35-1/2”
XWBC30-42**L/R**[¥] / WBC30-3342U	30”–33”	42”	12”	3	1	12”	39”	13-1/32”	40-1/32”	12”	39”	14-17/32”	41-17/32”

[¥] Hinged left (L) or hinged right (R) designation is required for assembled single-door wall cabinets.
Please add to the part number before the finish code.

Universal blind corner cabinets

Essentials Top View

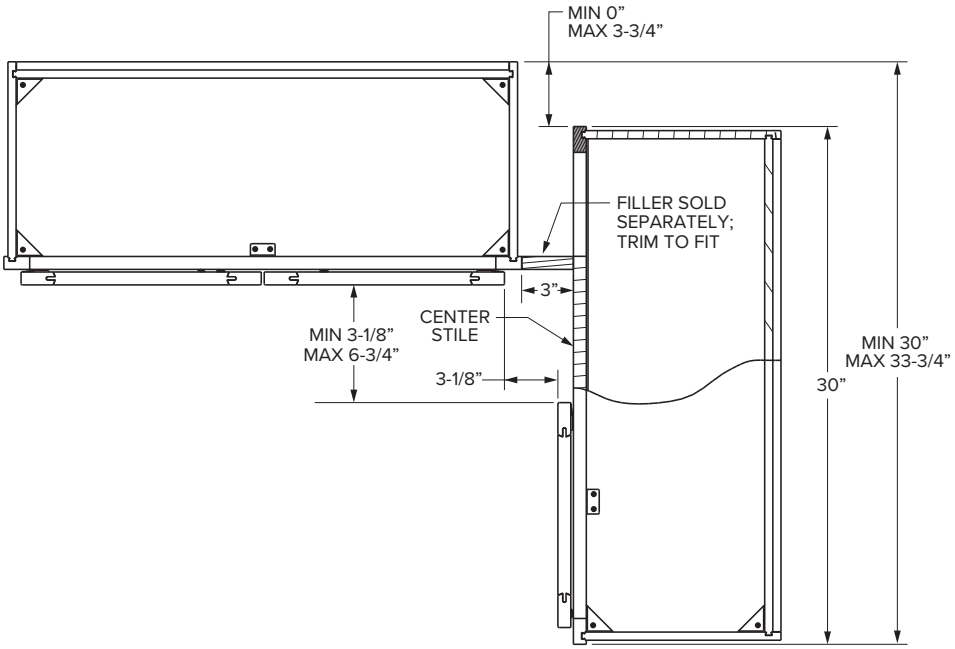

Premier Top View

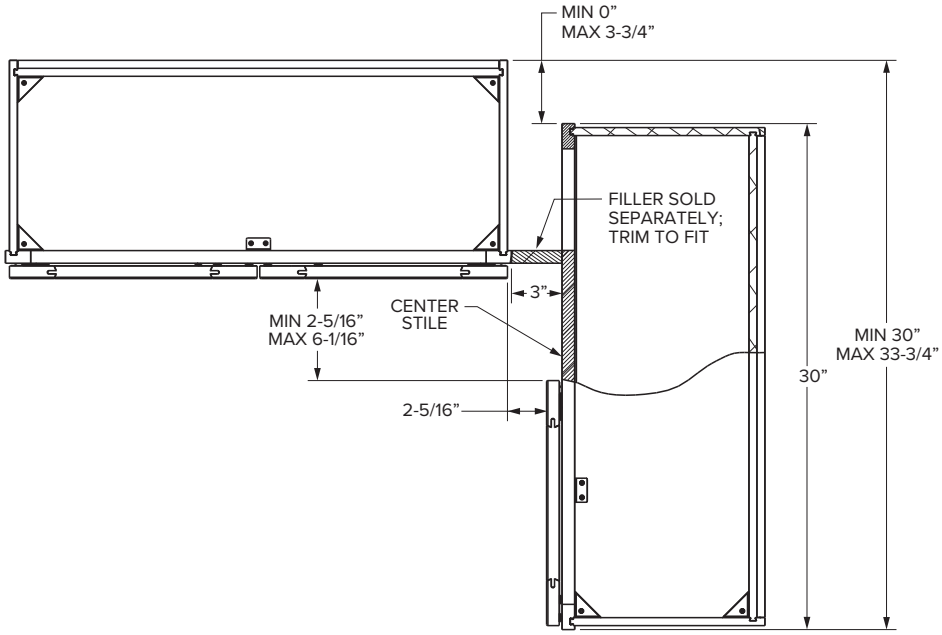

12” Deep diagonal corner cabinets

Essentials overlay

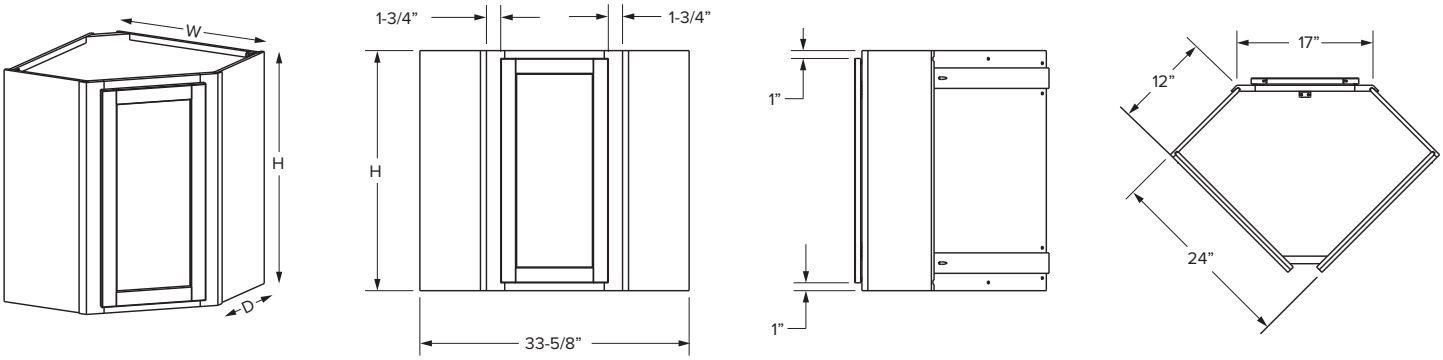

Premier overlay

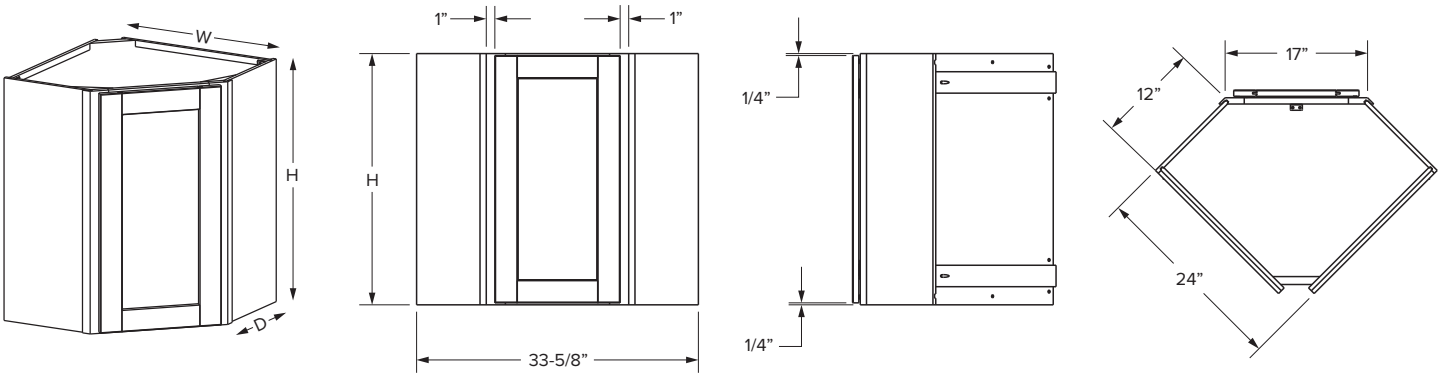

SKU Assembled / Unassembled	W	H	D	Shelves	# of Doors	ESSENTIALS Opening Width	ESSENTIALS Opening Height	ESSENTIALS Door Width	ESSENTIALS Door Height	PREMIER Opening Width	PREMIER Opening Height	PREMIER Door Width	PREMIER Door Height
XWDC2430**L/R**¥ / WDC2430	24”	30”	12”	2	1	12-7/16”	27”	13-7/16”	28-1/32”	12-7/16”	27”	14-31/32”	29-17/32”
XWDC2436**L/R**¥ / WDC2436	24”	36”	12”	2	1	12-7/16”	33”	13-7/16”	34-1/32”	12-7/16”	33”	14-31/32”	35-17/32”
XWDC2442**L/R**¥ / WDC2442	24”	42”	12”	3	1	12-7/16”	39”	13-7/16”	40-1/32”	12-7/16”	39”	14-31/32”	41-17/32”

¥ Hinged left (L) or hinged right (R) designation is required for assembled single-door wall cabinets.
Please add to the part number before the finish code.

15” Deep diagonal corner cabinets

Essentials overlay

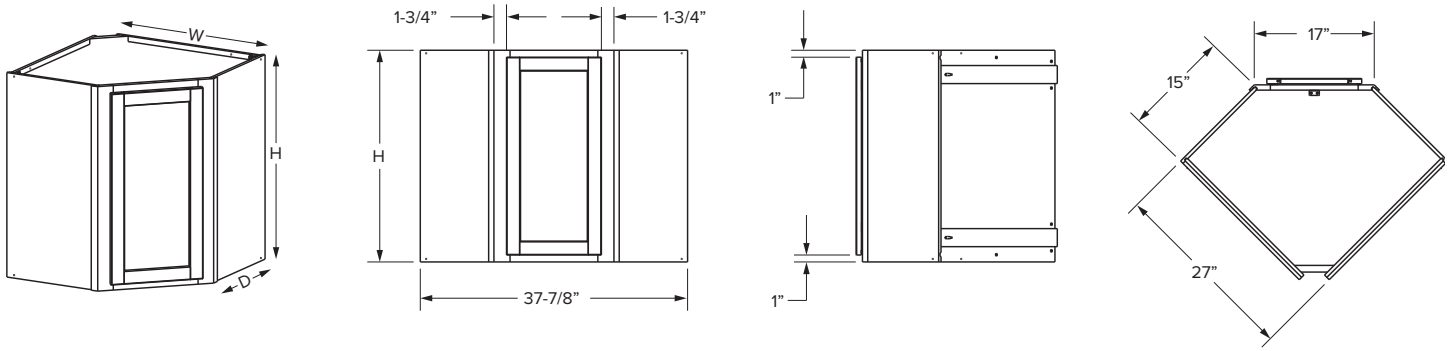

Premier overlay

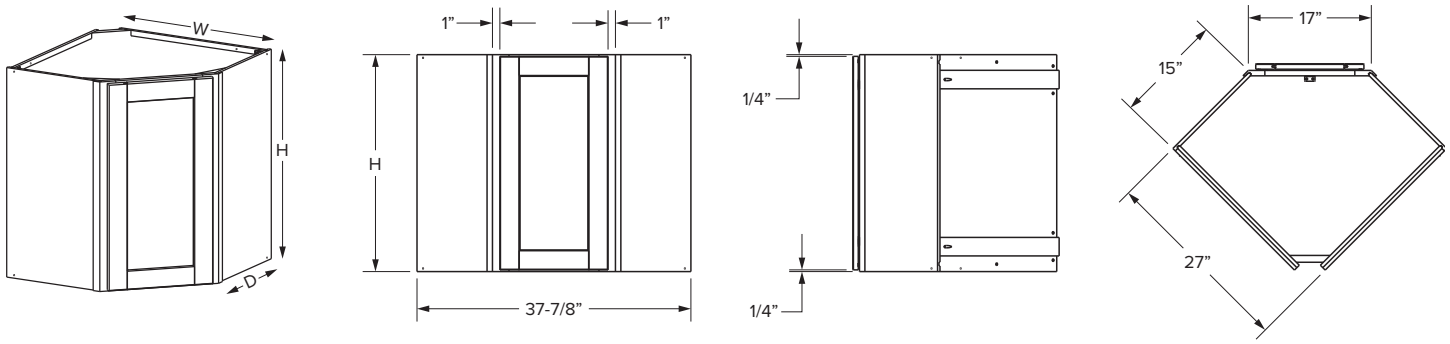

SKU Assembled / Unassembled	W	H	D	Shelves	# of Doors	ESSENTIALS Opening Width	ESSENTIALS Opening Height	ESSENTIALS Door Width	ESSENTIALS Door Height	PREMIER Opening Width	PREMIER Opening Height	PREMIER Door Width	PREMIER Door Height
XWDC273615**L/R**[¥] /WDC273615	27”	36”	15”	2	1	12-7/16”	33”	13-7/16”	34-1/32”	12-7/16”	33”	14-31/32”	35-17/32”
XWDC274215**L/R**[¥] / WDC274215	27”	42”	15”	3	1	12-7/16”	39”	13-7/16”	40-1/32”	12-7/16”	39”	14-31/32”	41-17/32”

[¥] Hinged left (L) or hinged right (R) designation is required for assembled single-door wall cabinets. Please add to the part number before the finish code.

Diagonal corner glass door cabinets

Premier Overlay - 24” Wide

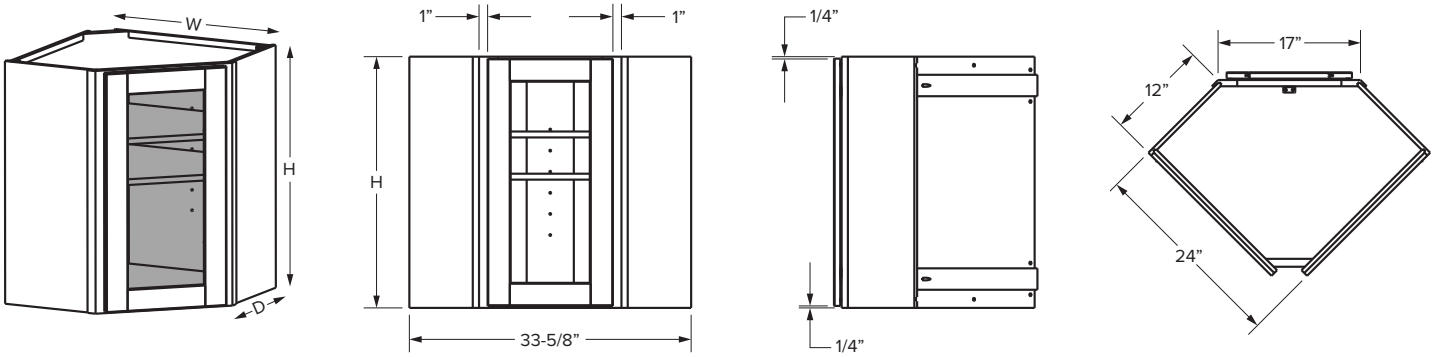

Premier Overlay - 27” Wide

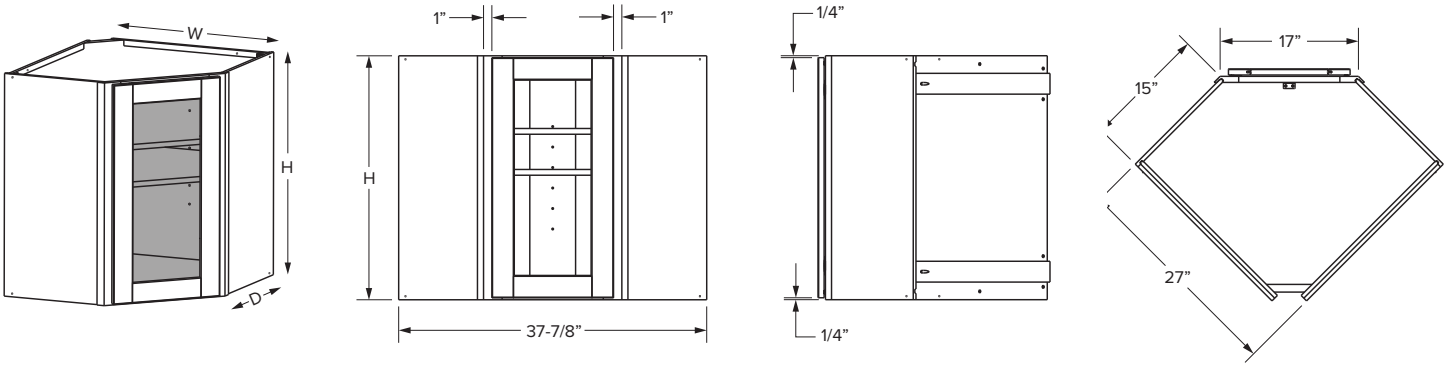

SKU Assembled / Unassembled	W	H	D	Shelves	# of Doors	PREMIER Opening Width	PREMIER Opening Height	PREMIER Door Width	PREMIER Door Height
XWDC2430MI**L/R**[¥] / WDC2430MI	24”	30”	12”	2	1	12-5/16”	27”	14-31/32”	29-17/32”
XWDC2436MI**L/R**[¥] / WDC2436MI	24”	36”	12”	2	1	12-5/16”	33”	14-31/32”	35-17/32”
XWDC2442MI**L/R**[¥] / WDC2442MI	24”	42”	12”	3	1	12-5/16”	39”	14-31/32”	41-17/32”
XWDC273615MI**L/R**[¥] / WDC273615MI	27”	36”	15”	2	1	12-5/16”	33”	14-31/32”	35-17/32”
XWDC274215MI**L/R**[¥] / WDC274215MI	27”	42”	15”	3	1	12-5/16”	33”	14-31/32”	41-17/32”

[¥] Hinged left (L) or hinged right (R) designation is required for assembled single-door wall cabinets.
Please add to the part number before the finish code.

Full height cabinets

Essentials Overlay

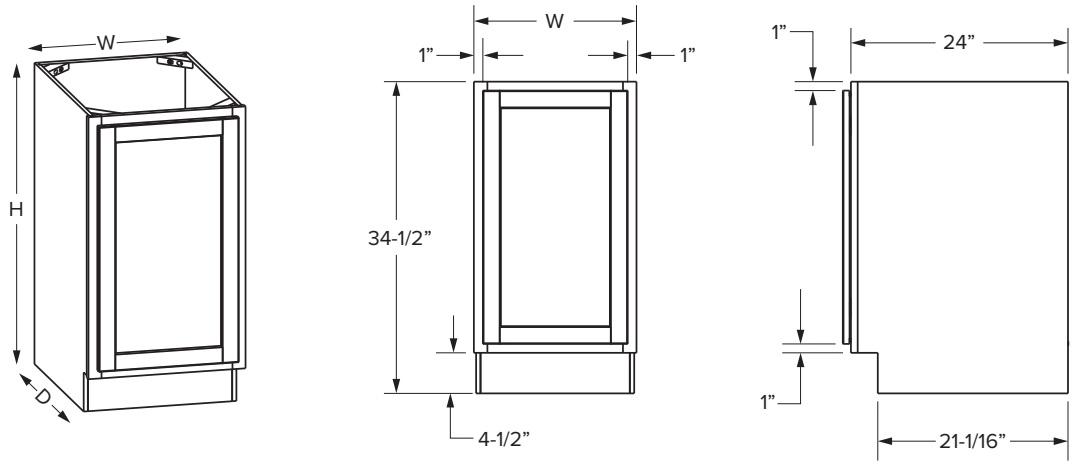

Premier Overlay

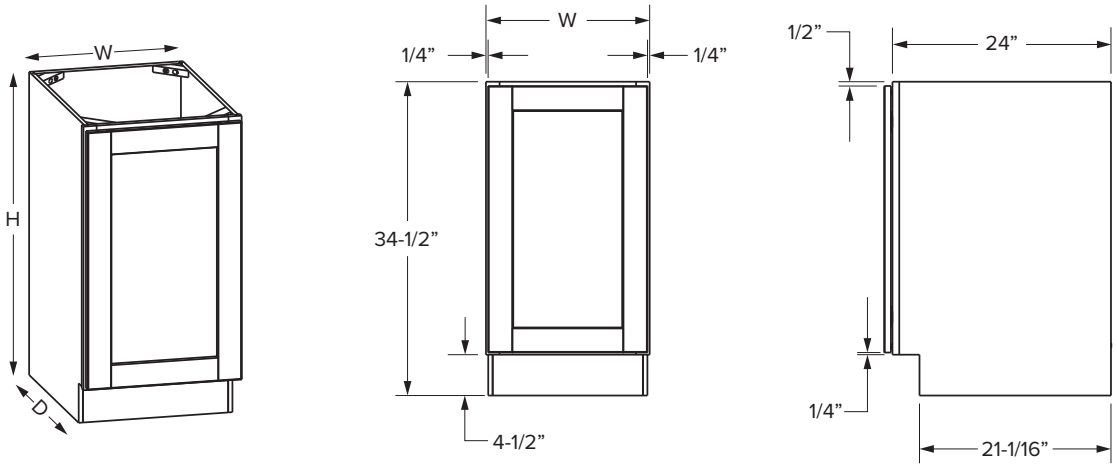

					ESSENTIALS				PREMIER			
					Opening		*Door Size*		*Opening*		*Door Size*	
SKU	**W**	**H**	**D**	**# of Doors**	**Width**	**Height**	**Width**	**Height**	**Width**	**Height**	**Width**	**Height**
BFH09	9”	34-1/2”	24”	1	6”	27”	7-1/32”	28-1/32”	6”	27”	8-17/32”	29-9/32”
BFH12	12”	34-1/2”	24”	1	9”	27”	10-1/32”	28-1/32”	9”	27”	11-17/32”	29-9/32”
BFH15	15”	34-1/2”	24”	1	12”	27”	13-1/32”	28-1/32”	12”	27”	14-17/32”	29-9/32”
BFH18	18”	34-1/2”	24”	1	15”	27”	16-1/32”	28-1/32”	15”	27”	17-17/32”	29-9/32”

Decorative Full Height Door Fronts available on page 66

Drawer/door cabinets

Essentials Overlay - Single Door

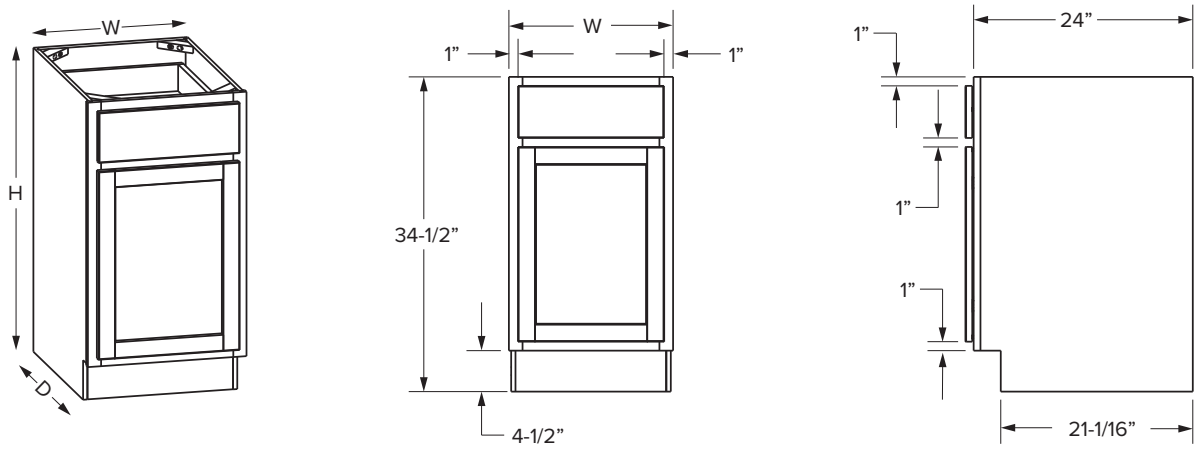

Essentials Overlay - Double Door

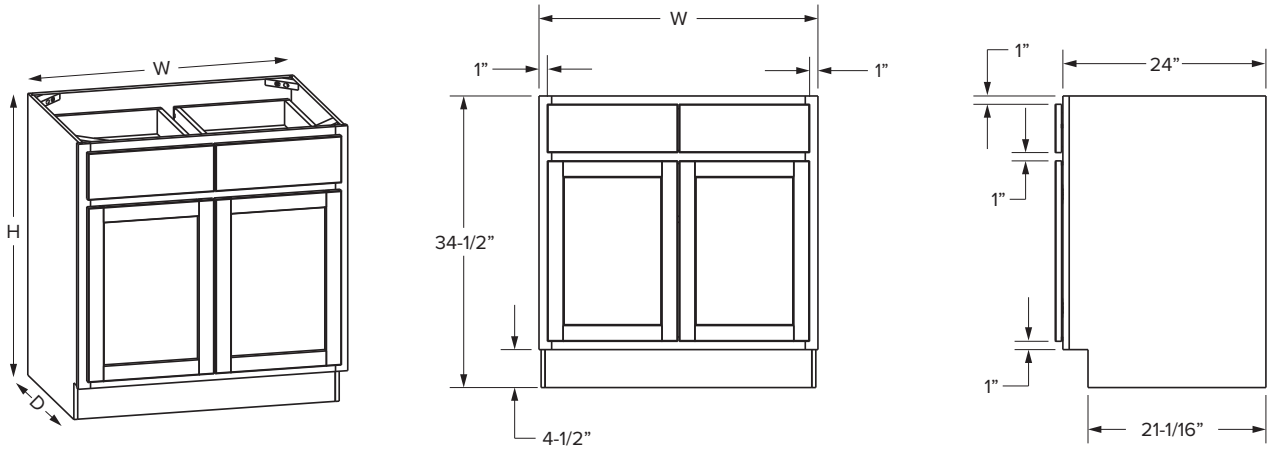

						ESSENTIALS							
						Door Opening		*Drawer Opening*		*Door Size*		*Drawer Front Size*	
SKU	W	H	D	# of Doors	# of Drawers	Width	Height	Width	Height	Width	Height	Width	Height
B12	12”	34-1/2”	24”	1	1	9”	20-1/2”	9”	5”	10-1/32”	21-11/32”	10-1/32”	5-23/32”
B15	15”	34-1/2”	24”	1	1	12”	20-1/2”	12”	5”	13-1/32”	21-11/32”	13-1/32”	5-23/32”
B18	18”	34-1/2”	24”	1	1	15”	20-1/2”	15”	5”	16-1/32”	21-11/32”	16-1/32”	5-23/32”
B21	21”	34-1/2”	24”	1	1	18”	20-1/2”	18”	5”	19-1/32”	21-11/32”	19-1/32”	5-23/32”
B24	24”	34-1/2”	24”	2	1	21”	20-1/2”	21”	5”	10-15/16”	21-11/32”	22-1/16”	5-23/32”
B27	27”	34-1/2”	24”	2	1	24”	20-1/2”	24”	5”	12-13/32”	21-11/32”	25-1/32”	5-23/32”
B30	30”	34-1/2”	24”	2	1	27”	20-1/2”	27”	5”	13-29/32”	21-11/32”	28-1/32”	5-23/32”
B33	33”	34-1/2”	24”	2	2	30”	20-1/2”	14-7/16”	5”	15-13/32”	21-11/32”	15-13/32”	5-23/32”
B36	36”	34-1/2”	24”	2	2	33”	20-1/2”	15-15/16”	5”	16-29/32”	21-11/32”	16-29/32”	5-23/32”
B39*	39”	34-1/2”	24”	2	2	16-1/2”	20-1/2”	16-1/2”	5”	17-17/32”	21-11/32”	17-17/32”	5-23/32”
B42*	42”	34-1/2”	24”	2	2	18”	20-1/2”	18”	5”	19-1/32”	21-11/32”	19-1/32”	5-23/32”

*39” and 42” wide cabinets have a center stile

Base Cabinets - Dimensions

Drawer/door cabinets

Premier Overlay - Single Door

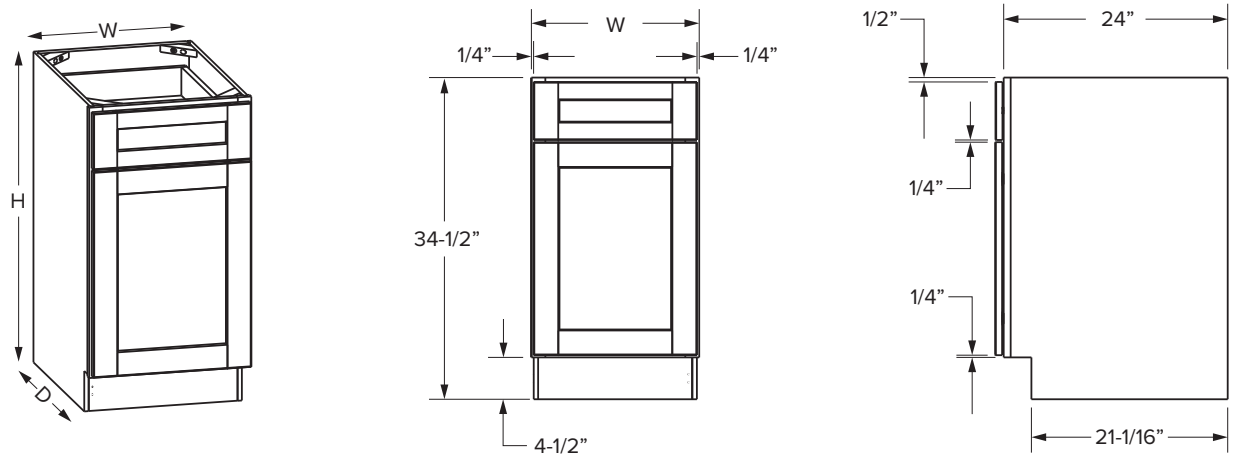

Premier Overlay - Double Door

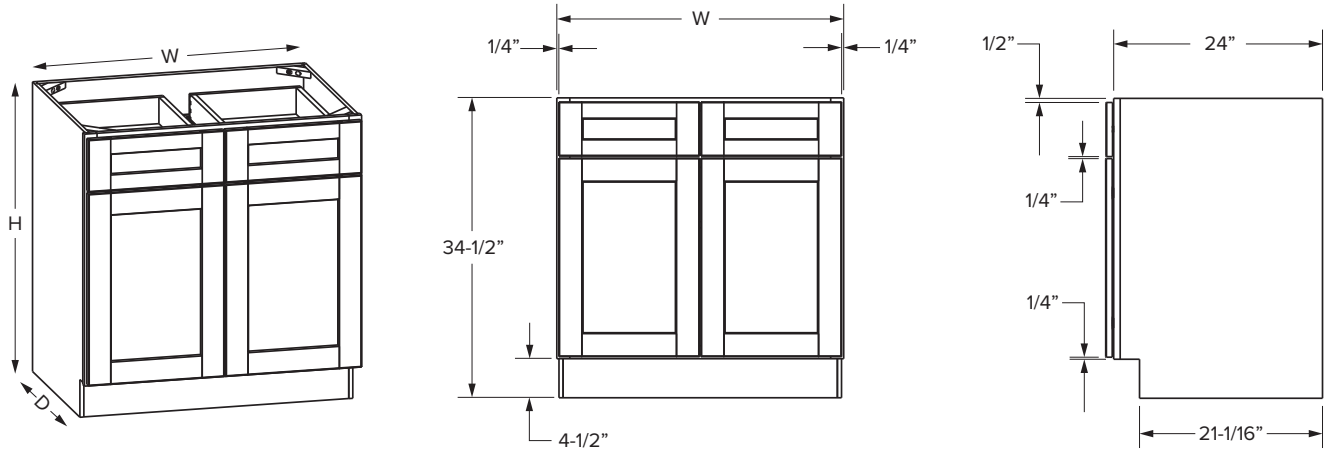

						PREMIER							
						Door Opening		*Drawer Opening*		*Door Size*		*Drawer Front Size*	
SKU	W	H	D	# of Doors	# of Drawers	Width	Height	Width	Height	Width	Height	Width	Height
B12	12”	34-1/2”	24”	1	1	9”	20-1/2”	9”	5”	11-17/32”	22-27/32”	11-17/32”	6-7/32”
B15	15”	34-1/2”	24”	1	1	12”	20-1/2”	12”	5”	14-17/32”	22-27/32”	14-17/32”	6-7/32”
B18	18”	34-1/2”	24”	1	1	15”	20-1/2”	15”	5”	17-17/32”	22-27/32”	17-17/32”	6-7/32”
B21	21”	34-1/2”	24”	1	1	18”	20-1/2”	18”	5”	20-17/32”	22-27/32”	20-17/32”	6-7/32”
B24	24”	34-1/2”	24”	2	1	21”	20-1/2”	21”	5”	11-11/16”	22-27/32”	23-17/32”	6-7/32”
B27	27”	34-1/2”	24”	2	1	24”	20-1/2”	24”	5”	13-3/16”	22-27/32”	26-17/32”	6-7/32”
B30	30”	34-1/2”	24”	2	1	27”	20-1/2”	27”	5”	14-11/16”	22-27/32”	29-17/32”	6-7/32”
B33	33”	34-1/2”	24”	2	2	30”	20-1/2”	13-11/16”	5”	16-3/16”	22-27/32”	16-3/16”	6-7/32”
B36	36”	34-1/2”	24”	2	2	33”	20-1/2”	15-3/16”	5”	17-11/16”	22-27/32”	17-11/16”	6-7/32”
B39*	39”	34-1/2”	24”	2	2	16-1/2”	20-1/2”	16-1/2”	5”	19-1/16”	22-27/32”	19-1/16”	6-7/32”
B42*	42”	34-1/2”	24”	2	2	18”	20-1/2”	18”	5”	20-17/32”	22-27/32”	20-17/32”	6-7/32”

*39” and 42” wide cabinets have a center stile

Sink base cabinets

Essentials Overlay

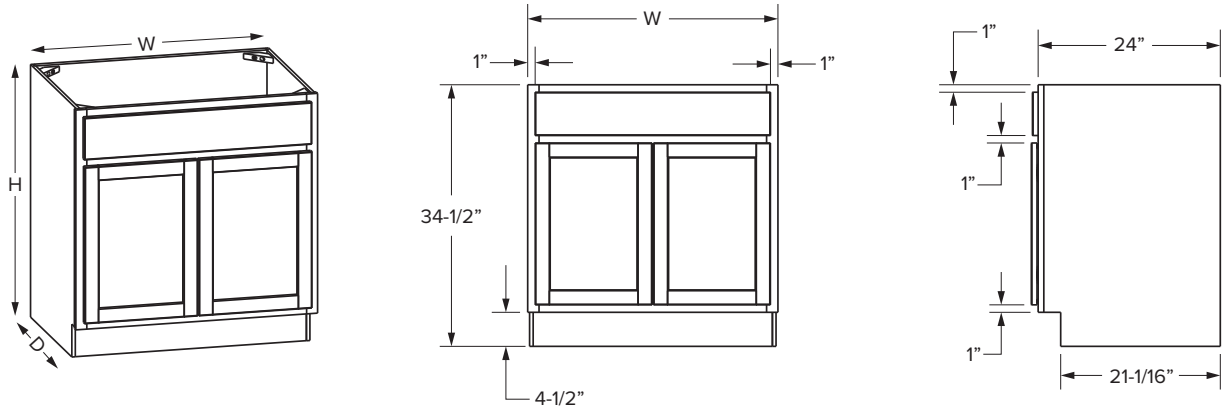

Premier Overlay

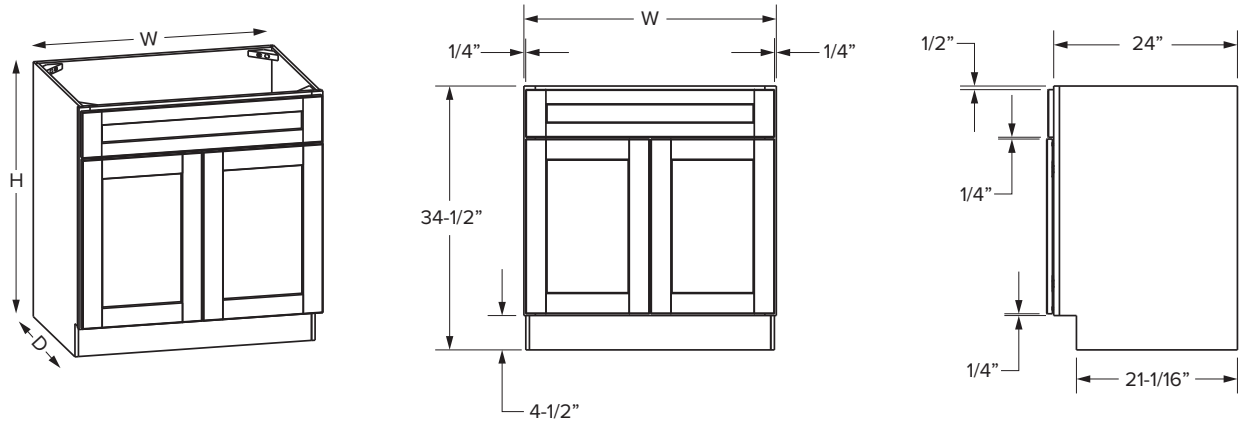

						ESSENTIALS							
						Door Opening		*Drawer Opening*		*Door Size*		*Drawer Front Size*	
SKU	**W**	**H**	**D**	**# of Doors**	**# of Drawers**	**Width**	**Height**	**Width**	**Height**	**Width**	**Height**	**Width**	**Height**
SB30	30”	34-1/2”	24”	2	1 false	27”	20-1/2”	27”	5”	13-29/32”	21-11/32”	28-1/32”	5-23/32”
SB33	33”	34-1/2”	24”	2	1 false	30”	20-1/2”	30”	5”	15-13/32”	21-11/32”	31-1/32”	5-23/32”
SB36	36”	34-1/2”	24”	2	1 false	33”	20-1/2”	33”	5”	16-29/32”	21-11/32”	34-1/32”	5-23/32”
SB39*	39”	34-1/2”	24”	2	1 false	16-7/16”	20-1/2”	35-7/8”	5”	17-17/32”	21-11/32”	37-1/32”	5-23/32”

*39” wide cabinets have a center stile

						PREMIER							
						Door Opening		*Drawer Opening*		*Door Size*		*Drawer Front Size*	
SKU	**W**	**H**	**D**	**# of Doors**	**# of Drawers**	**Width**	**Height**	**Width**	**Height**	**Width**	**Height**	**Width**	**Height**
SB30	30”	34-1/2”	24”	2	1 false	27”	20-1/2”	27”	5”	14-11/16”	22-27/32”	29-17/32”	6-7/32”
SB33	33”	34-1/2”	24”	2	1 false	30”	20-1/2”	30”	5”	16-3/16”	22-27/32”	32-17/32”	6-7/32”
SB36	36”	34-1/2”	24”	2	1 false	33”	20-1/2”	33”	5”	17-11/16”	22-27/32”	35-17/32”	6-7/32”
SB39*	39”	34-1/2”	24”	2	1 false	16-7/16”	20-1/2”	35-7/8”	5”	19-1/32”	22-27/32”	38-17/32”	6-7/32”

*39” wide cabinets have a center stile

Farm sink base cabinets

Essentials Overlay

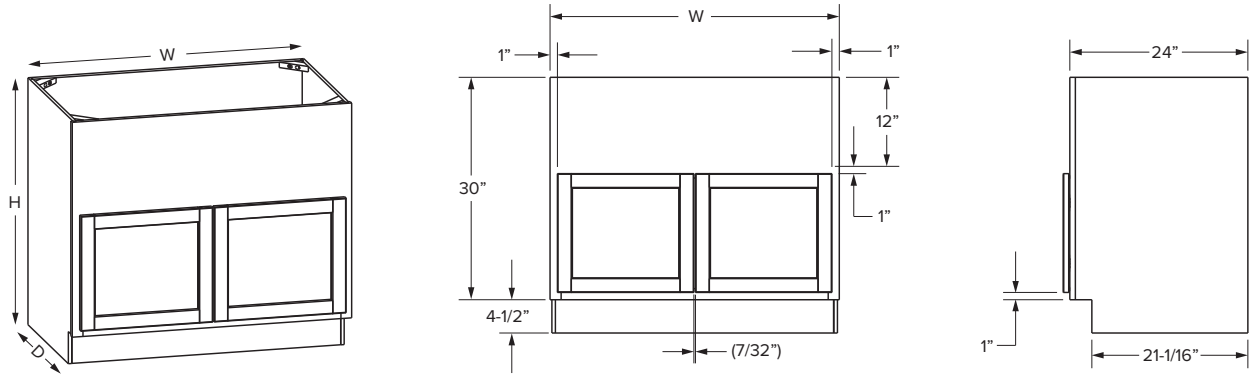

Premier Overlay

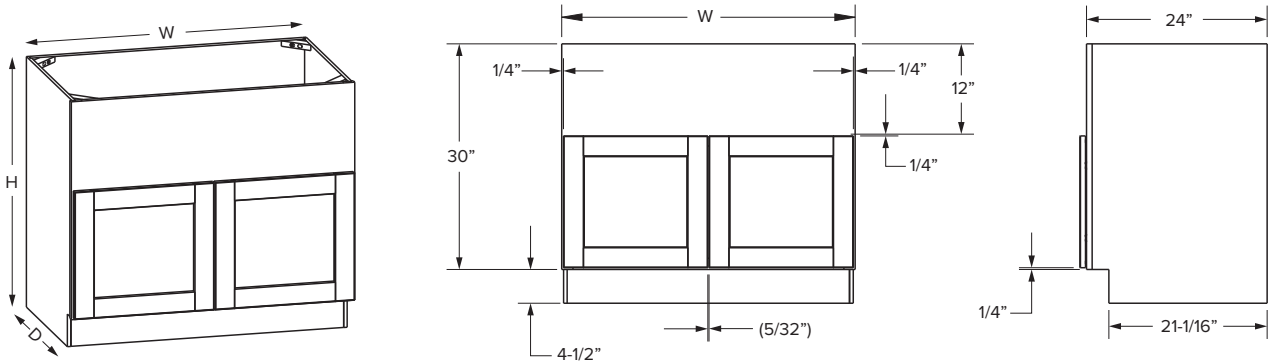

					ESSENTIALS						PREMIER					
					Door Opening		*Available Apron*		*Door Size*		*Opening*		*Available Apron*		*Door Size*	
SKU	**W**	**H**	**D**	**# of Doors**	**Width**	**Height**	**Width**	**Height**	**Width**	**Height**	**Width**	**Height**	**Width**	**Height**	**Width**	**Height**
SBF36	36”	34-1/2”	24”	2	33”	14-15/16”	33”	12-1/4”	16-29/32”	16-1/32”	33”	14-13/16”	33”	12”	17-11/16”	17-17/32”
SBF39	39”	34-1/2”	24”	2	36”	14-15/16”	36”	12-1/4”	18-13/32”	16-1/32”	36”	14-13/16”	36”	12”	19-3/16”	17-17/32”

Sink front corner diagonal

Essentials Overlay

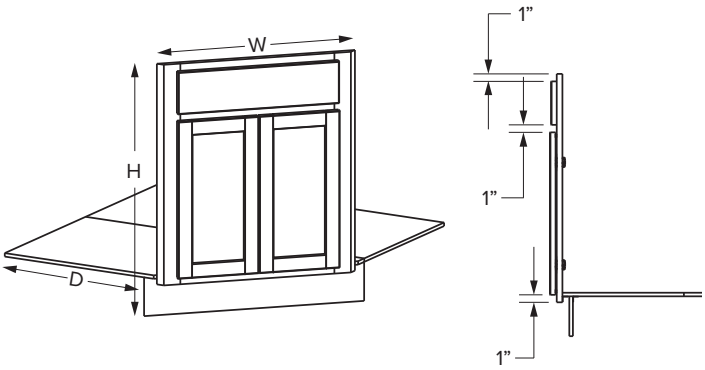

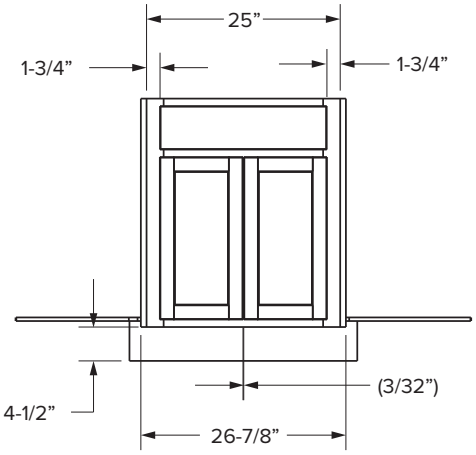

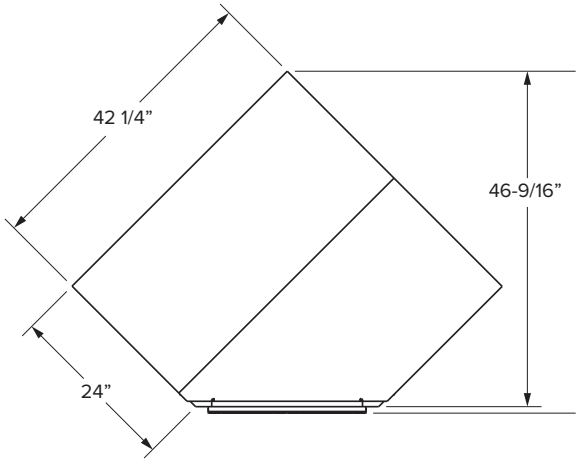

Premier Overlay

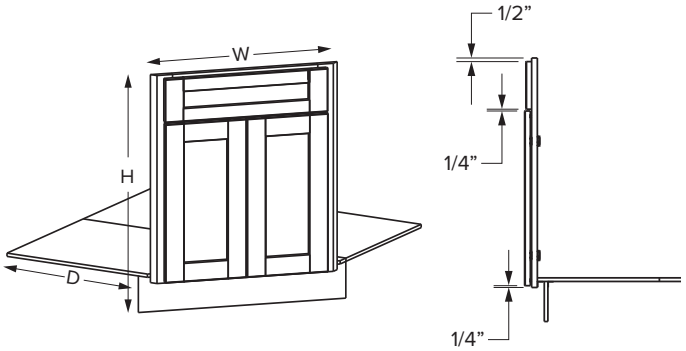

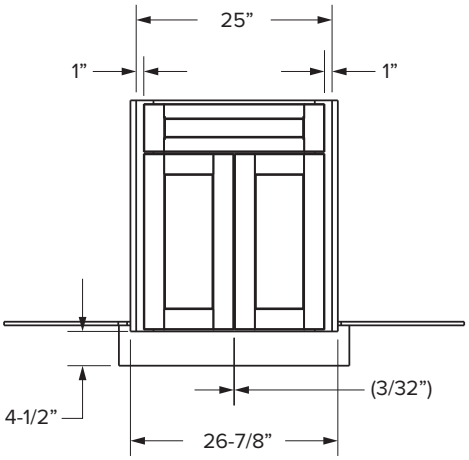

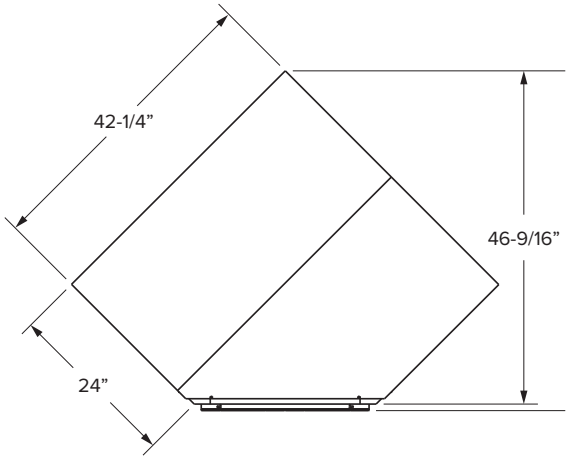

						ESSENTIALS							
						Door Opening		*Drawer Opening*		*Door Size*		*Drawer Front Size*	
SKU	**W**	**H**	**D**	**# of Doors**	**# of Drawers**	**Width**	**Height**	**Width**	**Height**	**Width**	**Height**	**Width**	**Height**
SFCD42	26-7/8”	34-1/2”	24”	2	1 false	20-13/16”	20-1/2”	20-13/16”	5”	10-15/16”	21-11/32”	21-7/8”	5-23/32”

						PREMIER							
						Door Opening		*Drawer Opening*		*Door Size*		*Drawer Front Size*	
SKU	**W**	**H**	**D**	**# of Doors**	**# of Drawers**	**Width**	**Height**	**Width**	**Height**	**Width**	**Height**	**Width**	**Height**
SFCD42	26-7/8”	34-1/2”	24”	2	1 false	20-13/16”	20-1/2”	20-13/16”	5”	11-11/16”	22-27/32”	23-15/32”	6-7/32”

Corner cabinets

Essentials Overlay

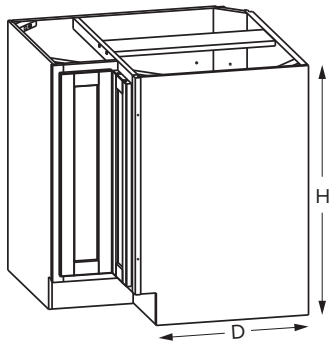

Original Design

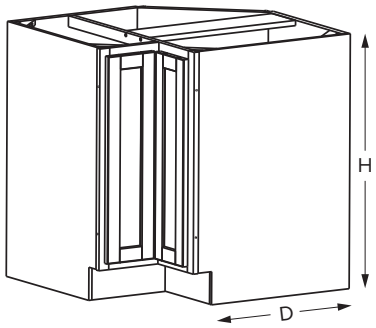

Updated Design

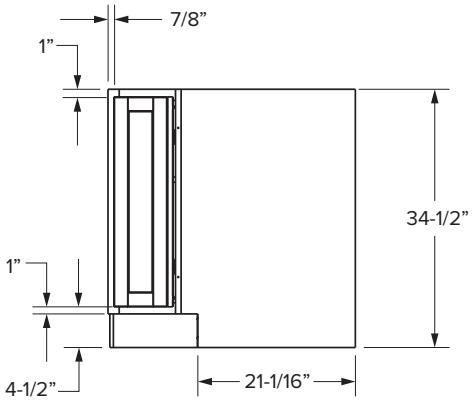

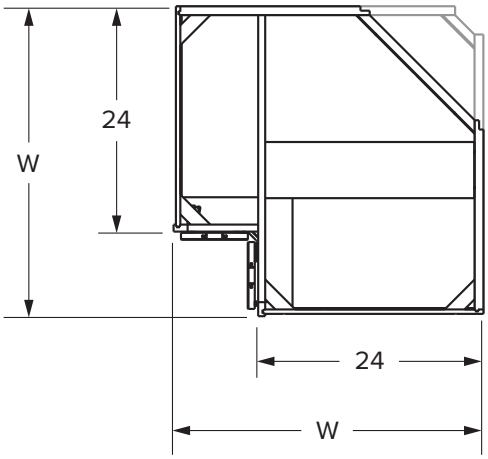

*This cabinet is transitioning to an updated rear support design.

Premier Overlay

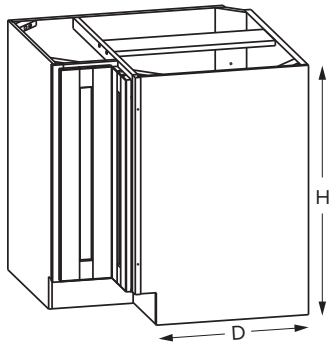

Original Design

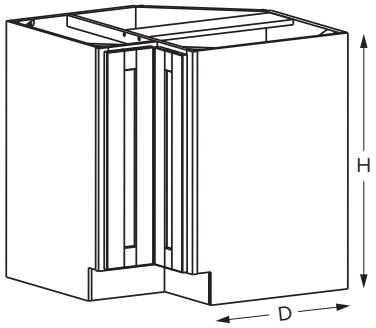

Updated Design

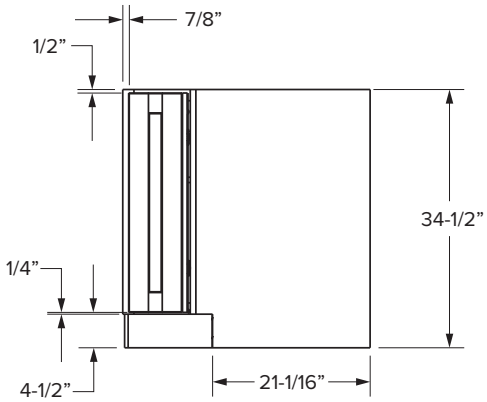

					ESSENTIALS				PREMIER			
					Door Opening		*Door Size*		*Door Opening*		*Door Size*	
SKU	**W**	**H**	**D**	**# of Doors**	**Width**	**Height**	**Width**	**Height**	**Width**	**Height**	**Width**	**Height**
BC33U	33”	34-1/2”	24”	1	7-1/2”	27”	7-1/8”	28-1/32”	7-1/2”	27”	7-1/8”	29-9/32”
BC36U	36”	34-1/2”	24”	1	10-1/2”	27”	10-1/8”	28-1/32”	10-1/2”	27”	10-1/8”	29-9/32”

Blind corner cabinets

Essentials Overlay

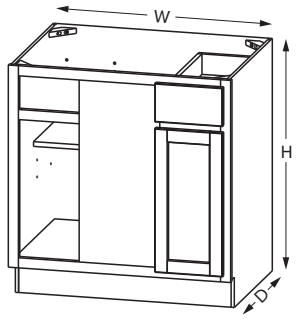

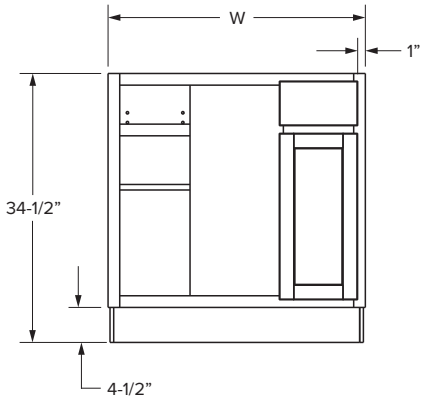

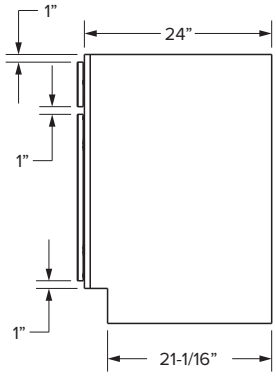

Premier Overlay

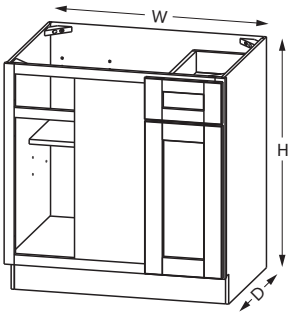

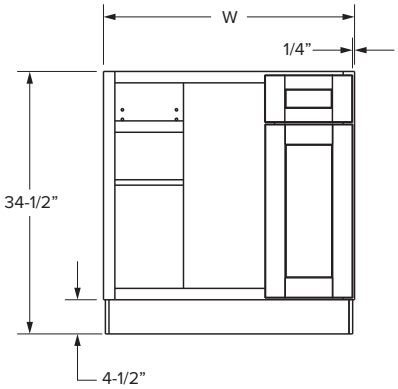

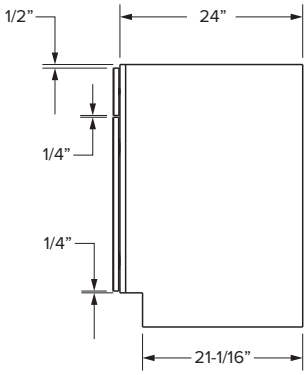

				ESSENTIALS							
				Door Opening		*Drawer Opening*		*Door Size*		*Drawer Front Size*	
SKU	**W**	**H**	**D**	**Width**	**Height**	**Width**	**Height**	**Width**	**Height**	**Width**	**Height**
BBC39-42U	33”	34-1/2”	24”	9”	20-1/2”	9”	5”	10-1/32”	21-11/32”	10-1/32”	5-23/32”
BBC42-45U	39”	34-1/2”	24”	12”	20-1/2”	12”	5”	13-1/32”	21-11/32”	13-1/32”	5-23/32”
BBC45-48U	42”	34-1/2”	24”	15”	20-1/2”	15”	5”	16-1/32”	21-11/32”	16-1/32”	5-23/32”

				PREMIER							
				Door Opening		*Drawer Opening*		*Door Size*		*Drawer Front Size*	
SKU	**W**	**H**	**D**	**Width**	**Height**	**Width**	**Height**	**Width**	**Height**	**Width**	**Height**
BBC39-42U	33”	34-1/2”	24”	9”	20-1/2”	9”	5”	11-17/32”	22-27/32”	11-17/32”	6-7/32”
BBC42-45U	39”	34-1/2”	24”	12”	20-1/2”	12”	5”	14-17/32”	22-27/32”	14-17/32”	6-7/32”
BBC45-48U	42”	34-1/2”	24”	15”	20-1/2”	15”	5”	17-17/32”	22-27/32”	17-17/32”	6-7/32”

Base Cabinets - Dimensions

Essentials Top View

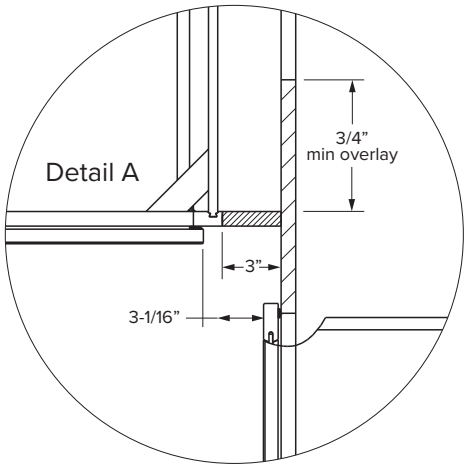

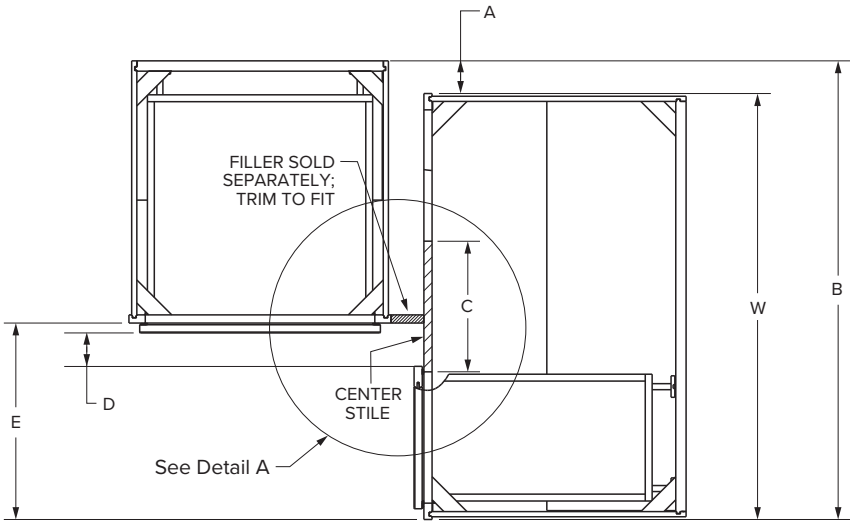

Premier Top View

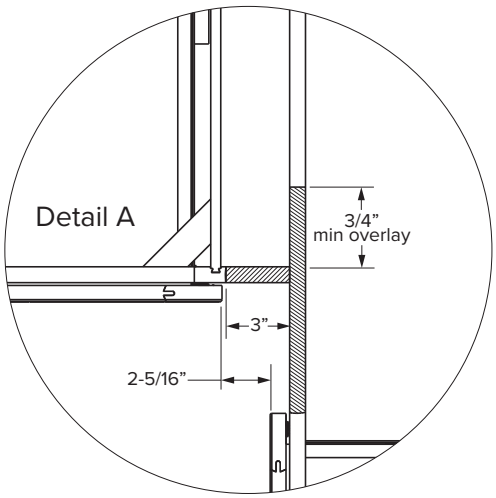

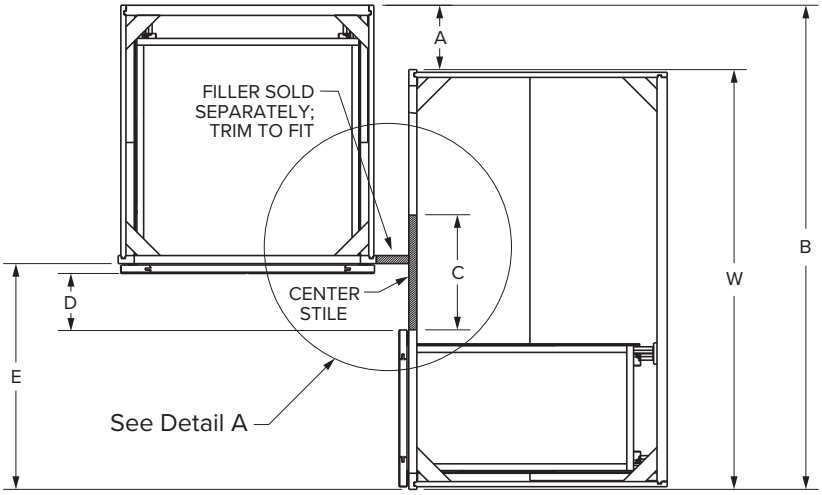

		ESSENTIALS									
		A		*B*		*C*		*D*		*E*	
SKU	**W**	**Min**	**Max**	**Min**	**Max**	**Min**	**Max**	**Min**	**Max**	**Min**	**Max**
BBC39-42U	33”	6”	9”	39”	42”	6-3/4”	3-3/4”	3-1/16”	6-1/16”	15”	18”
BBC42-45U	39”	3”	6”	42”	45”	6-3/4”	3-3/4”	3-1/16”	6-1/16”	18”	21”
BBC45-48U	42”	3”	6”	45”	48”	3-3/4”	3/4”	3-1/16”	6-1/16”	21”	24”

		PREMIER									
		A		*B*		*C*		*D*		*E*	
SKU	**W**	**Min**	**Max**	**Min**	**Max**	**Min**	**Max**	**Min**	**Max**	**Min**	**Max**
BBC39-42U	33”	6”	9”	39”	42”	3-3/4”	6-3/4”	2-5/16”	5-5/16”	15”	18”
BBC42-45U	39”	3”	6”	42”	45”	3-3/4”	6-3/4”	2-5/16”	5-5/16”	18”	21”
BBC45-48U	42”	3”	6”	45”	48”	3/4”	3-3/4”	2-5/16”	5-5/16”	21”	24”

Two drawer cabinets

Essentials Overlay

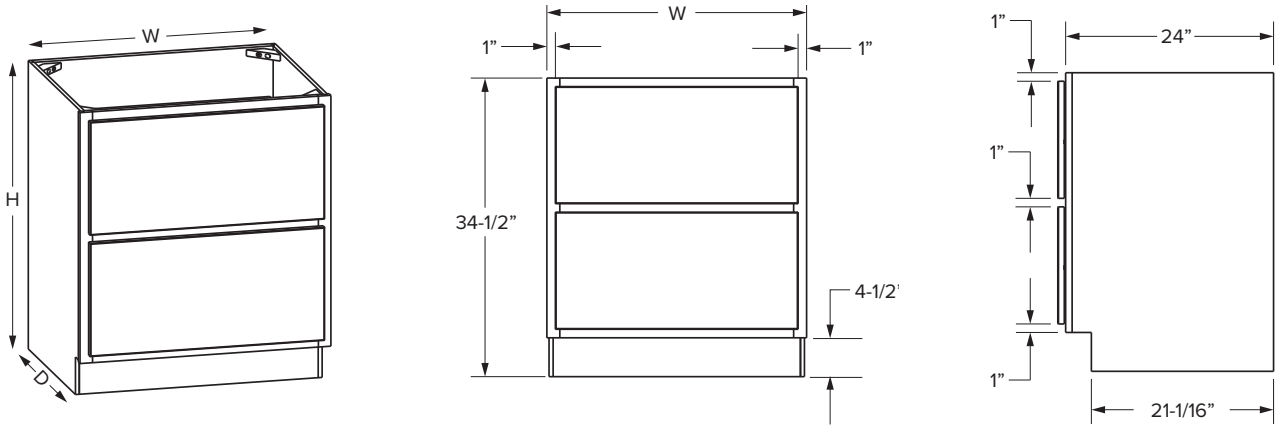

Premier Overlay

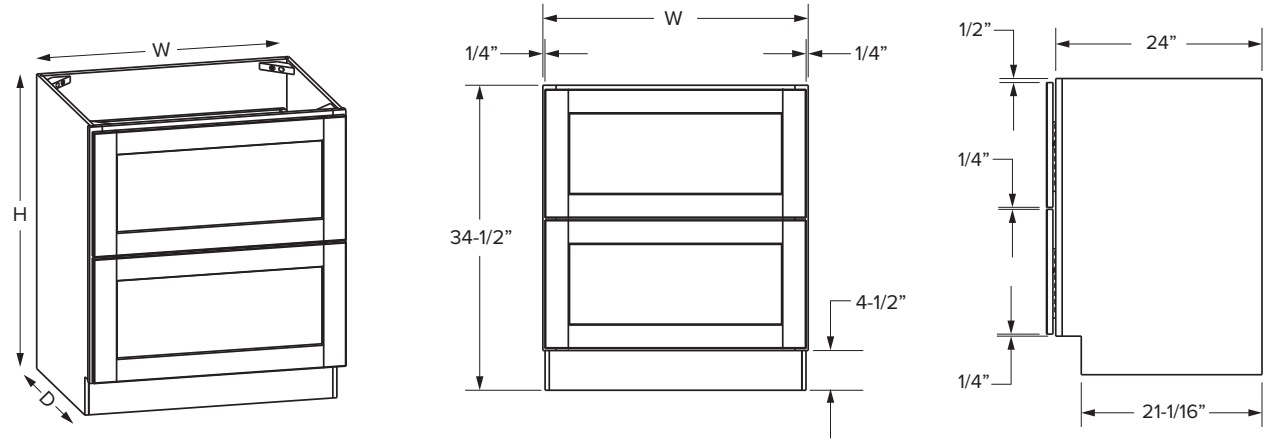

					ESSENTIALS					PREMIER				
					Drawer Opening			*Drawer Front Size*		*Drawer Opening*			*Drawer Front Size*	
SKU	**W**	**H**	**D**	**# of Drawers**	**Width**	**1 Height**	**2 Height**	**Width**	**Height**	**Width**	**1 Height**	**2 Height**	**Width**	**Height**
DB30-2	30”	34-1/2”	24”	2	27”	12-1/2”	12-9/16”	28-1/32”	13-17/32”	27”	12-1/4”	12-13/16”	29-17/32”	14-17/32”
DB36-2	36”	34-1/2”	24”	2	33”	12-1/2”	12-9/16”	34-1/32”	13-17/32”	33”	12-1/4”	12-13/16”	35-17/32”	14-17/32”

Three drawer cabinets

Essentials Overlay

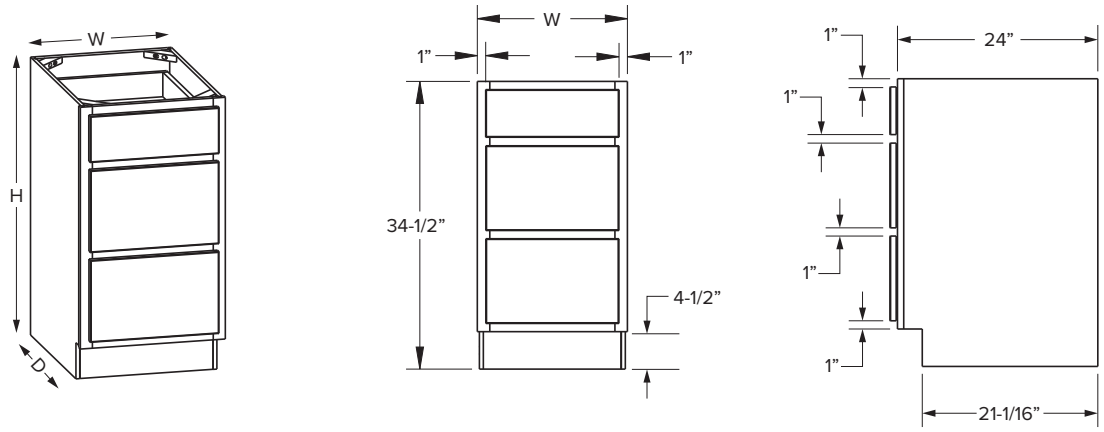

Premier Overlay

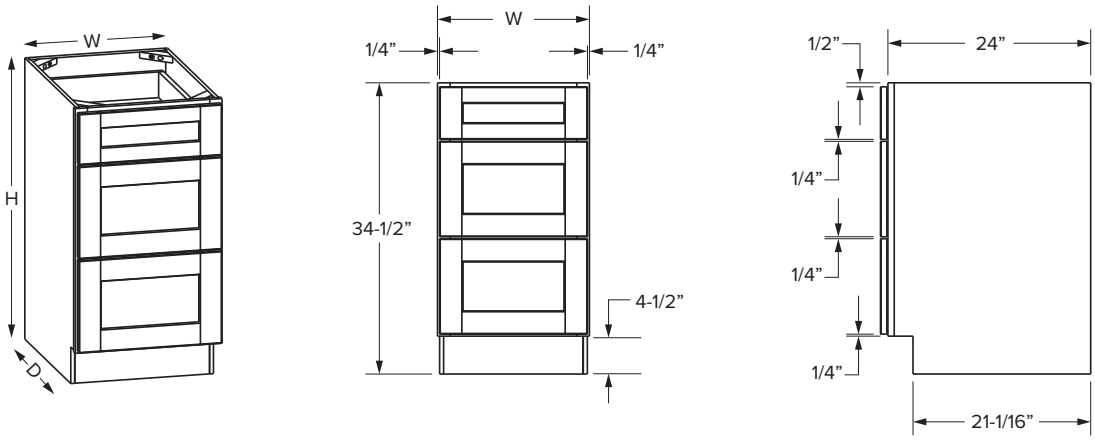

SKU	W	H	D	# of Drawers	ESSENTIALS Drawer Opening Width	1 Height	2 Height	3 Height	Drawer Front Size Width	1 Height	2 Height	3 Height
DB12-3	12”	34-1/2”	24”	3	9”	5”	9-3/8”	9-3/16”	9-31/32”	5-23/32”	10-5/32”	10-5/32”
DB15-3	15”	34-1/2”	24”	3	12”	5”	9-3/8”	9-3/16”	12-31/32”	5-23/32”	10-5/32”	10-5/32”
DB18-3	18”	34-1/2”	24”	3	15”	5”	9-3/8”	9-3/16”	15-31/32”	5-23/32”	10-5/32”	10-5/32”
DB21-3	21”	34-1/2”	24”	3	18”	5”	9 3/8”	9-3/16”	18-31/32”	5-23/32”	10-5/32”	10-5/32”
DB24-3	24”	34-1/2”	24”	3	21”	5”	9-3/8”	9-3/16”	21-31/32”	5-23/32”	10-5/32”	10-5/32”
DB30-3	30”	34-1/2”	24”	3	27”	5”	9-3/8”	9-3/16”	28-31/32”	5-23/32”	10-5/32”	10-5/32”
DB36-3	36”	34-1/2”	24”	3	33”	5”	9-3/8”	9-3/16”	34-31/32”	5-23/32”	10-5/32”	10-5/32”

SKU	W	H	D	# of Drawers	PREMIER Drawer Opening Width	1 Height	2 Height	3 Height	Drawer Front Size Width	1 Height	2 Height	3 Height
DB12-3	12”	34-1/2”	24”	3	9”	5”	9”	9-9/16”	11-17/32”	6-7/32”	11-5/16”	11-5/16”
DB15-3	15”	34-1/2”	24”	3	12”	5”	9”	9-9/16”	14-17/32”	6-7/32”	11-5/16”	11-5/16”
DB18-3	18”	34-1/2”	24”	3	15”	5”	9”	9-9/16”	17-17/32”	6-7/32”	11-5/16”	11-5/16”
DB21-3	21”	34-1/2”	24”	3	18”	5”	9”	9-9/16”	20-17/32”	6-7/32”	11-5/16”	11-5/16”
DB24-3	24”	34-1/2”	24”	3	21”	5”	9”	9-9/16”	23-17/32”	6-7/32”	11-5/16”	11-5/16”
DB30-3	30”	34-1/2”	24”	3	27”	5”	9”	9-9/16”	29-17/32”	6-7/32”	11-5/16”	11-5/16”
DB36-3	36”	34-1/2”	24”	3	33”	5”	9”	9-9/16”	35-17/32”	6-7/32”	11-5/16”	11-5/16”

Essentials Overlay

Single Door

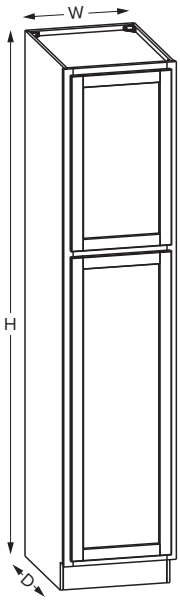

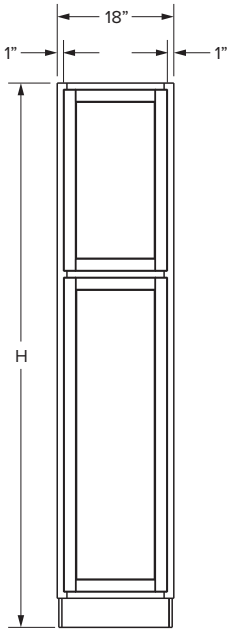

Double Door

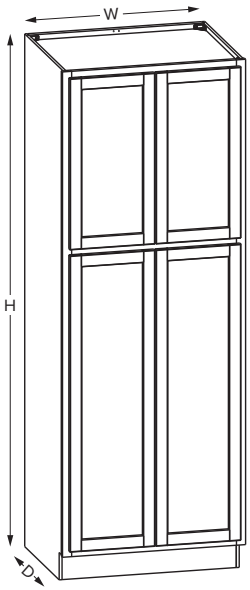

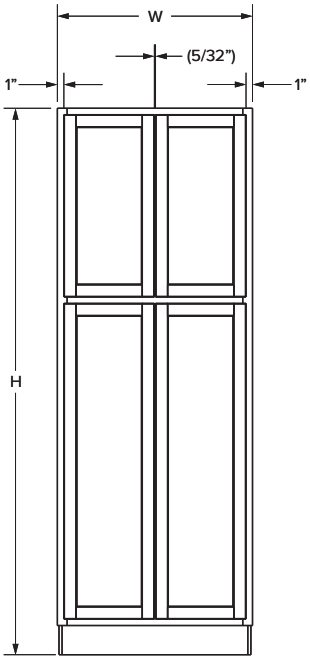

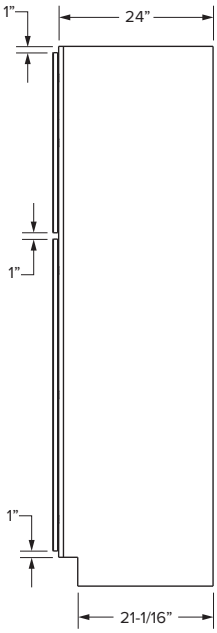

SKU Assembled / Unassembled	W	H	D	Shelves	# of Doors	ESSENTIALS *Door Opening* Width	1 Height	2 Height	*Door Size* Width	1 Height	2 Height
XUP1884**L/R**[x] / UP1884	18”	84”	24”	6	2	15”	27”	47-1/2”	16-1/32”	28-1/32”	48-17/32”
XUP1890**L/R**[x] / UP1890	18”	90”	24”	6	2	15”	33”	47-1/2”	16-1/32”	34-1/32”	48-17/32”
XUP1896**L/R**[x] / UP1896	18”	96”	24”	6	2	15”	39”	47-1/2”	16-1/32”	40-1/32”	48-17/32”
UP2484	24”	84”	24”	6	4	21”	27”	47-1/2”	10-15/16”	28-1/32”	48-17/32”
UP2490	24”	90”	24”	6	4	21”	33”	47-1/2”	10-15/16”	34-1/32”	48-17/32”
UP2496	24”	96”	24”	6	4	21”	39”	47-1/2”	10-15/16”	40-1/32”	48-17/32”
UP3084	30”	84”	24”	6	4	27”	27”	47-1/2”	13-29/32”	28-1/32”	48-17/32”
UP3090	30”	90”	24”	6	4	27”	33”	47-1/2”	13-29/32”	34-1/32”	48-17/32”
UP3096	30”	96”	24”	6	4	27”	39”	47-1/2”	13-29/32”	40-1/32”	48-17/32”

[x]Hinged left (L) or hinged right (R) designation is required for assembled single-door linen cabinets. Please add to the part number before the finish code.

Pantry Cabinets - Dimensions

Premier Overlay

Single Door

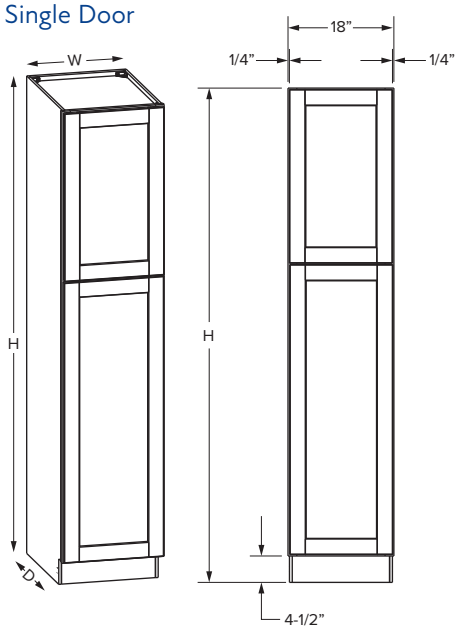

Double Door

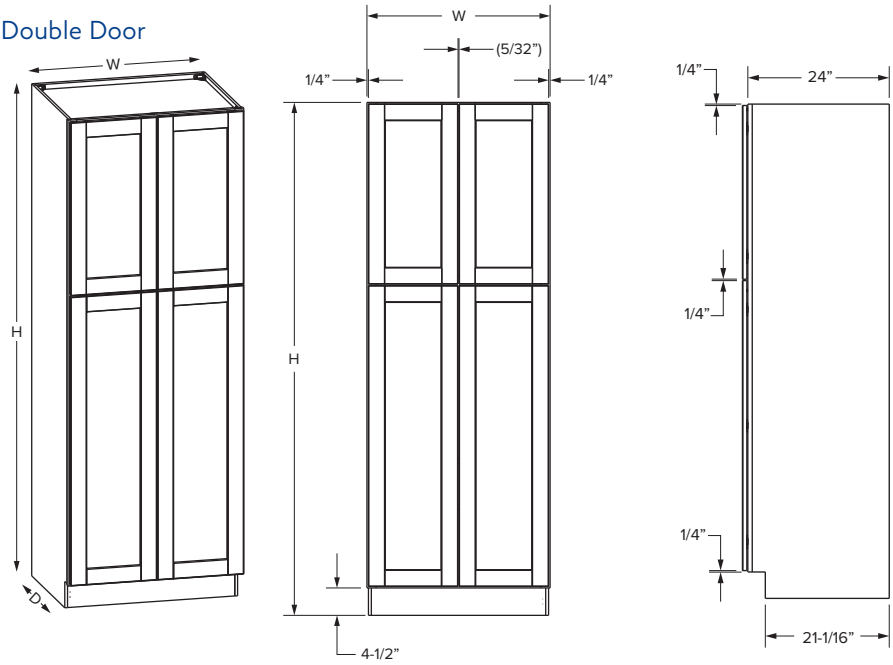

SKU Assembled / Unassembled	W	H	D	Shelves	# of Doors	PREMIER Door Opening Width	1 Height	2 Height	Door Size Width	1 Height	2 Height
XUP1884**L/R**[x] / UP1884	18”	84”	24”	6	2	15”	27”	47-1/2”	17-17/32”	29-17/32”	49-9/32”
XUP1890**L/R**[x] / UP1890	18”	90”	24”	6	2	15”	33”	47-1/2”	17-17/32”	35-17/32”	49-9/32”
XUP1896**L/R**[x] / UP1896	18”	96”	24”	6	2	15”	39”	47-1/2”	17-17/32”	41-17/32”	49-9/32”
UP2484	24”	84”	24”	6	4	21”	27”	47-1/2”	11-11/16”	29-17/32”	49-9/32”
UP2490	24”	90”	24”	6	4	21”	33”	47-1/2”	11-11/16”	35-17/32”	49-9/32”
UP2496	24”	96”	24”	6	4	21”	39”	47-1/2”	11-11/16”	41-17/32”	49-9/32”
UP3084	30”	84”	24”	6	4	27”	27”	47-1/2”	14-11/16”	29-17/32”	49-9/32”
UP3090	30”	90”	24”	6	4	27”	33”	47-1/2”	14-11/16”	35-17/32”	49-9/32”
UP3096	30”	96”	24”	6	4	27”	39”	47-1/2”	14-11/16”	41-17/32”	49-9/32”

[x]Hinged left (L) or hinged right (R) designation is required for assembled single-door linen cabinets. Please add to the part number before the finish code.

Universal oven cabinets

Essentials Overlay

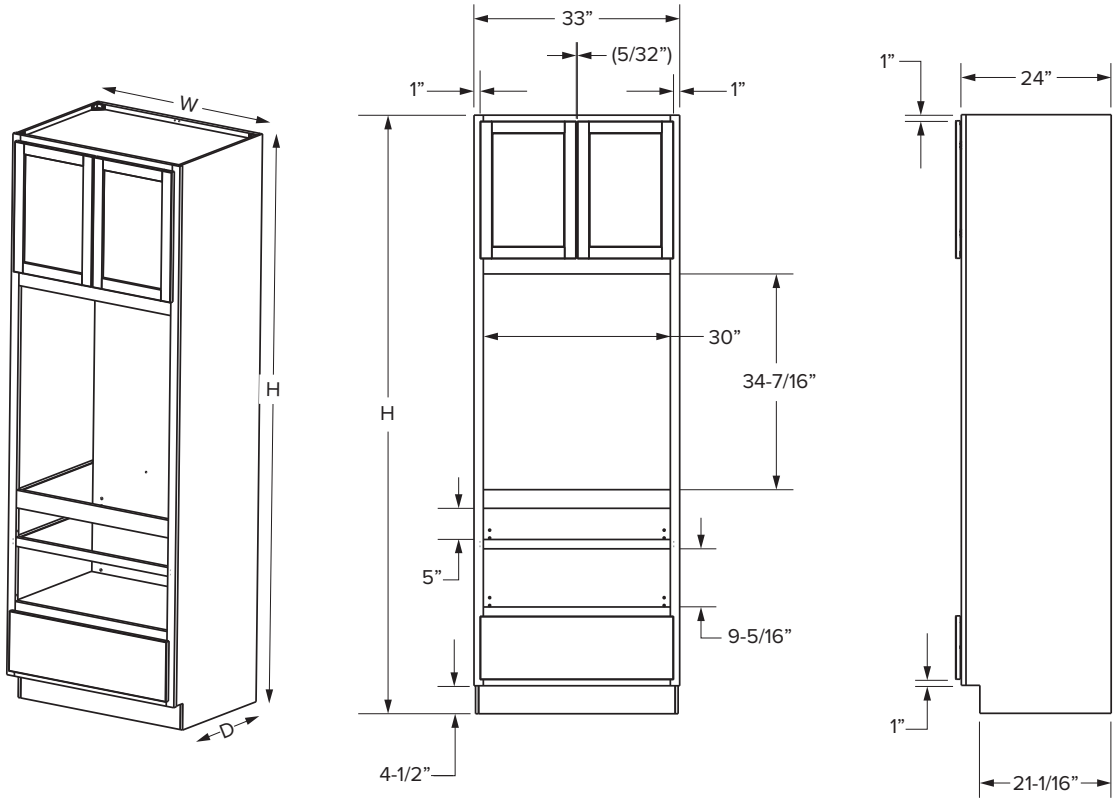

							ESSENTIALS									
							Door Opening		*Drawer Opening*		*Door Size*		*Drawer Front Size*		*Double Oven Space*	*Single Oven Space*
SKU	**W**	**H**	**D**	**Shelves**	**# of Doors**	**# of Drawers**	**Width**	**Height**	**Width**	**Height**	**Width**	**Height**	**Width**	**Height**	**Height**	**Height**
OVD3384U	33”	84”	24”	0	2	1	30”	9”	30”	9”	15-13/32”	9-31/32”	31-1/32”	10-5/32”	53-5/16”	34-1/2”
OVD3390U	33”	90”	24”	0	2	1	30”	15”	30”	9”	15-13/32”	16-1/32”	31-1/32”	10-5/32”	53-5/16”	34-1/2”
OVD3396U	33”	96”	24”	1	2	1	30”	21”	30”	9”	15-13/32”	22-1/32”	31-1/32”	10-5/32”	57-7/16”	34-19/32”

Universal oven cabinets

Premier Overlay

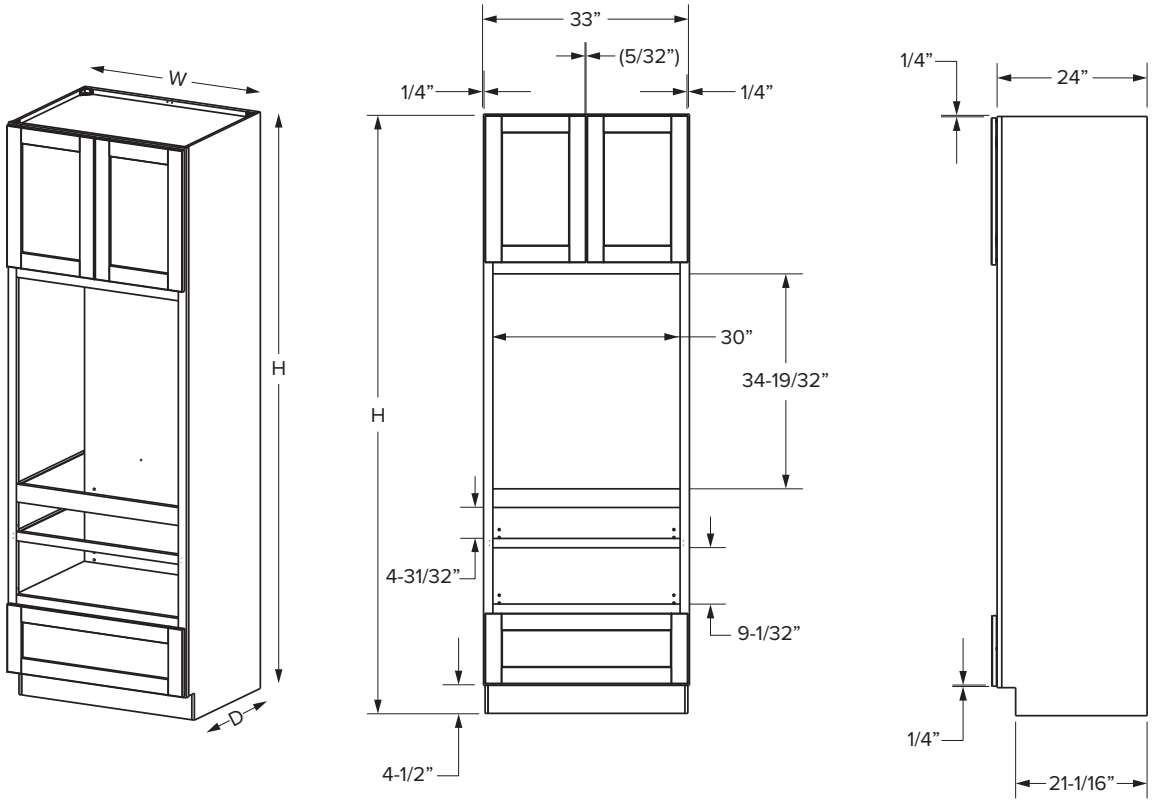

							PREMIER									
							Door Opening		*Drawer Opening*		*Door Size*		*Drawer Front Size*		*Double Oven Space*	*Single Oven Space*
SKU	**W**	**H**	**D**	**Shelves**	**# of Doors**	**# of Drawers**	**Width**	**Height**	**Width**	**Height**	**Width**	**Height**	**Width**	**Height**	**Height**	**Height**
OVD3384U	33”	84”	24”	0	2	1	30”	9”	30”	9”	16-3/16”	11-17/32”	32-17/32”	11-5/16”	52-29/32”	34-7/16”
OVD3390U	33”	90”	24”	0	2	1	30”	15”	30”	9”	16-3/16”	17-17/32”	32-17/32”	11-5/16”	52-29/32”	34-7/16”
OVD3396U	33”	96”	24”	1	2	1	30”	21”	30”	9”	16-3/16”	23-17/32”	32-17/32”	11-5/16”	52-29/32”	34-7/16”

Universal oven drawer kit

Essentials Overlay

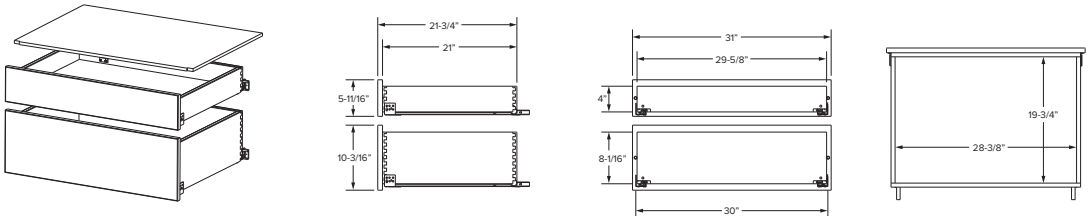

Premier Overlay

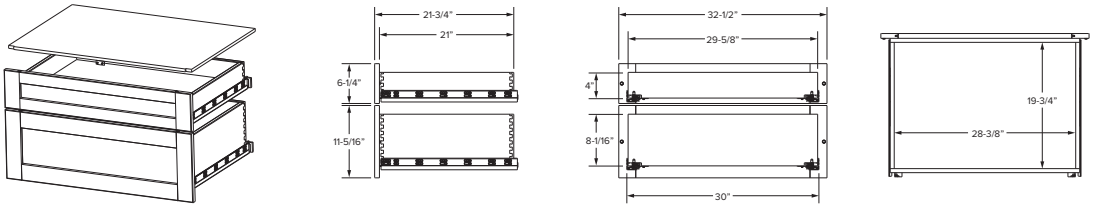

		ESSENTIALS						PREMIER					
		Drawer Opening			*Drawer Front Size*			*Drawer Opening*			*Drawer Front Size*		
SKU	**# of Drawers**	**Width**	**1 Height**	**2 Height**	**Width**	**1 Height**	**2 Height**	**Width**	**1 Height**	**2 Height**	**Width**	**1 Height**	**2 Height**
OVD33D	2	30”	5”	9-5/16”	29-5/8”	5-23/32”	8-3/32”	30”	5”	9”	32-1/2”	6-7/32”	11-5/16”

Double oven cabinets

Essentials Overlay

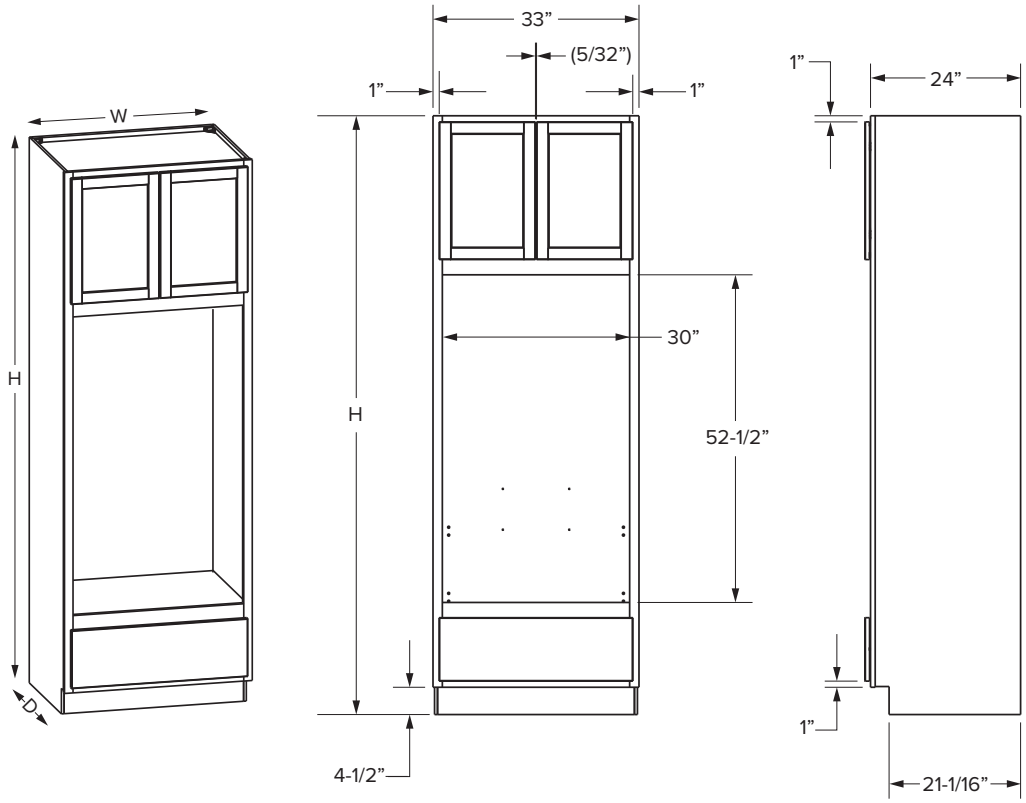

							ESSENTIALS							
							Door Opening		*Drawer Opening*		*Door Size*		*Drawer Front Size*	
SKU	W	H	D	Shelves	# of Doors	# of Drawers	Width	Height	Width	Height	Width	Height	Width	Height
OVD3384	33”	84”	24”	0	2	1	30”	9”	30”	9”	15-13/32”	9-31/32”	31-31/32”	10-5/32”
OVD3390	33”	90”	24”	0	2	1	30”	15”	30”	9”	15-13/32”	16-1/32”	31-31/32”	10-5/32”
OVD3396	33”	96”	24”	1	2	1	30”	21”	30”	9”	15-13/32”	22-1/32”	31-31/32”	10-5/32”

Double oven cabinets

Premier Overlay

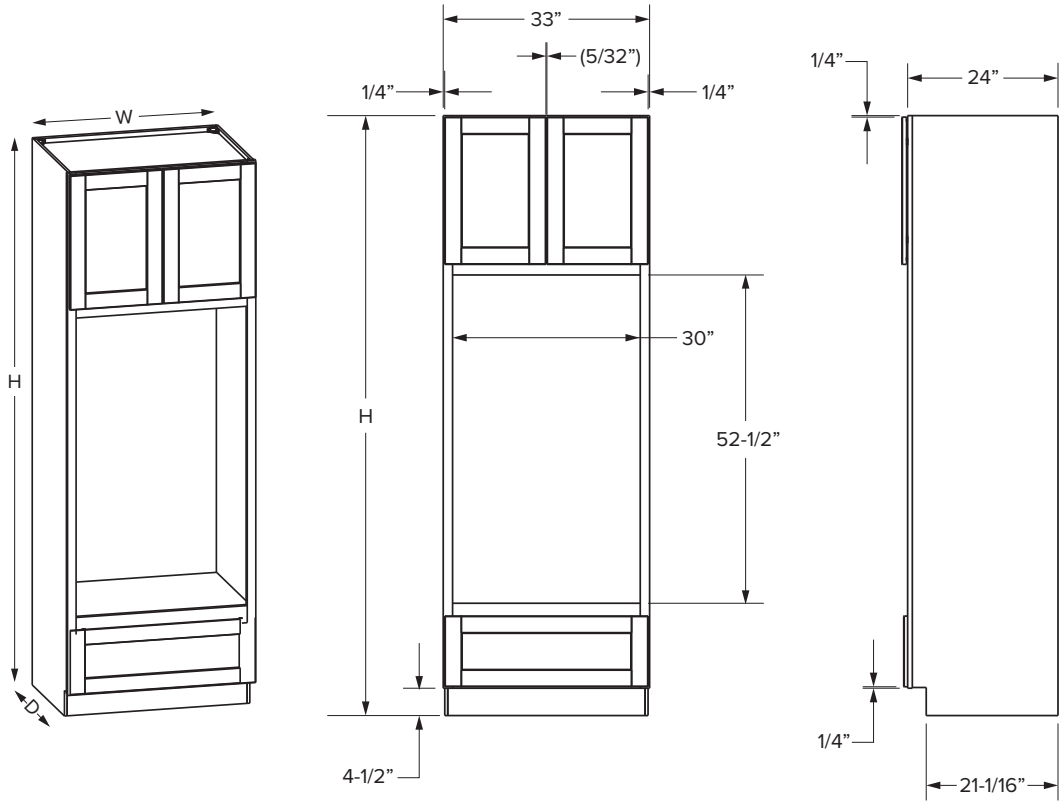

							PREMIER							
							Door Opening		*Drawer Opening*		*Door Size*		*Drawer Front Size*	
SKU	**W**	**H**	**D**	**Shelves**	**# of Doors**	**# of Drawers**	**Width**	**Height**	**Width**	**Height**	**Width**	**Height**	**Width**	**Height**
OVD3384	33”	84”	24”	0	2	1	30”	9”	30”	9”	16-3/16”	11-17/32”	32-1/2”	11-5/16”
OVD3390	33”	90”	24”	0	2	1	30”	15”	30”	9”	16-3/16”	17-17/32”	32-1/2”	11-5/16”
OVD3396	33”	96”	24”	1	2	1	30”	21”	30”	9”	16-3/16”	23-17/32”	32-1/2”	11-5/16”

Double oven panel overlay

SKU	**W**	**T**	**H**
OVD33P	32-1/2”	3/4”	55”

NOTE: Can be trimmed to size
Works with Premier & Essentials

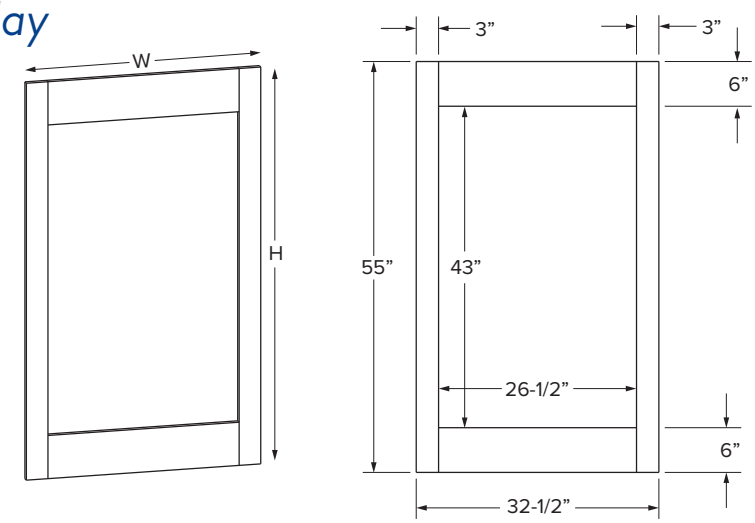

Microwave base cabinets

Essentials Overlay

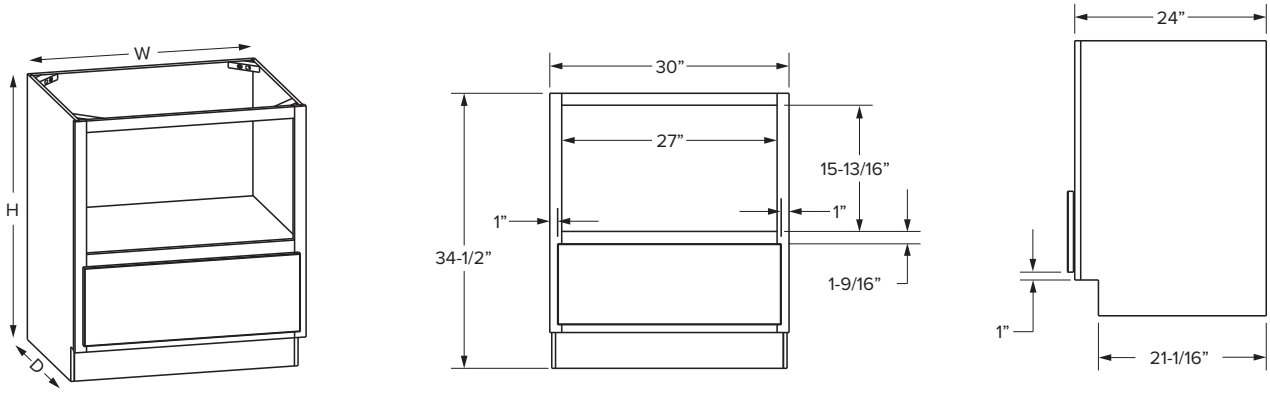

Premier Overlay

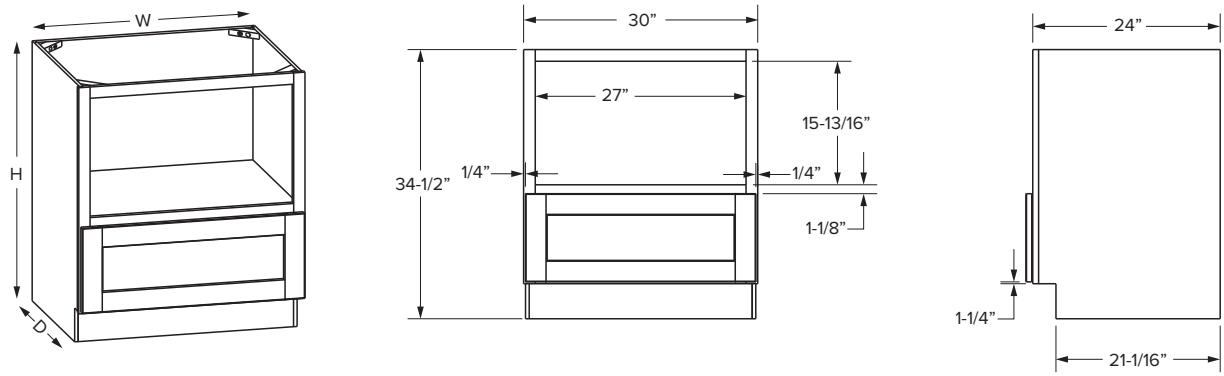

					ESSENTIALS					
					Opening		*Drawer Opening*		*Drawer Front Size*	
SKU	**W**	**H**	**D**	**# of Drawers**	**Width**	**Height**	**Width**	**Height**	**Width**	**Height**
MWB30	30”	34-1/2”	24”	1	27”	15-3/4”	27”	9-1/4”	28-1/32”	10-1/8”

					PREMIER					
					Opening		*Drawer Opening*		*Drawer Front Size*	
SKU	**W**	**H**	**D**	**# of Drawers**	**Width**	**Height**	**Width**	**Height**	**Width**	**Height**
MWB30	30”	34-1/2”	24”	1	27”	15-3/4”	27”	9-5/8”	29-17/32”	11-5/16”

Microwave cabinets

Essentials Overlay

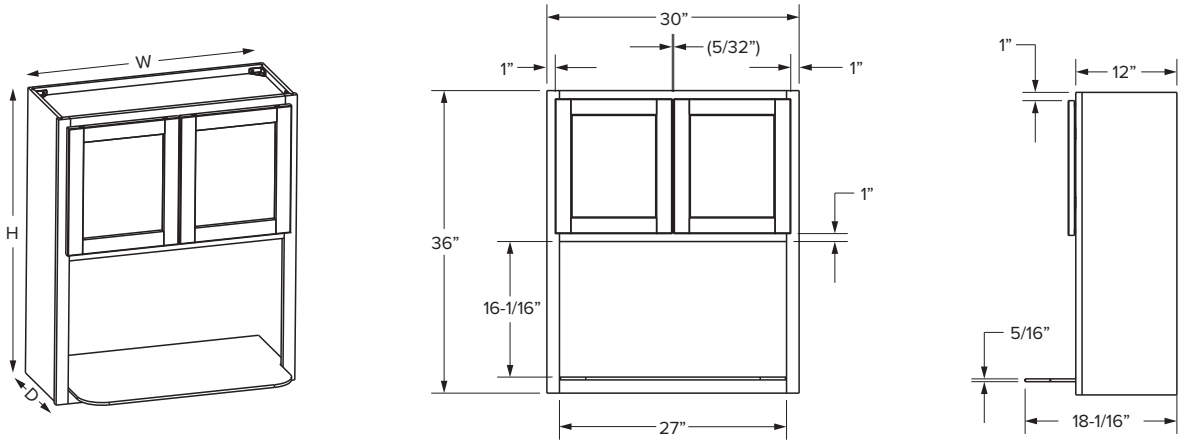

Premier Overlay

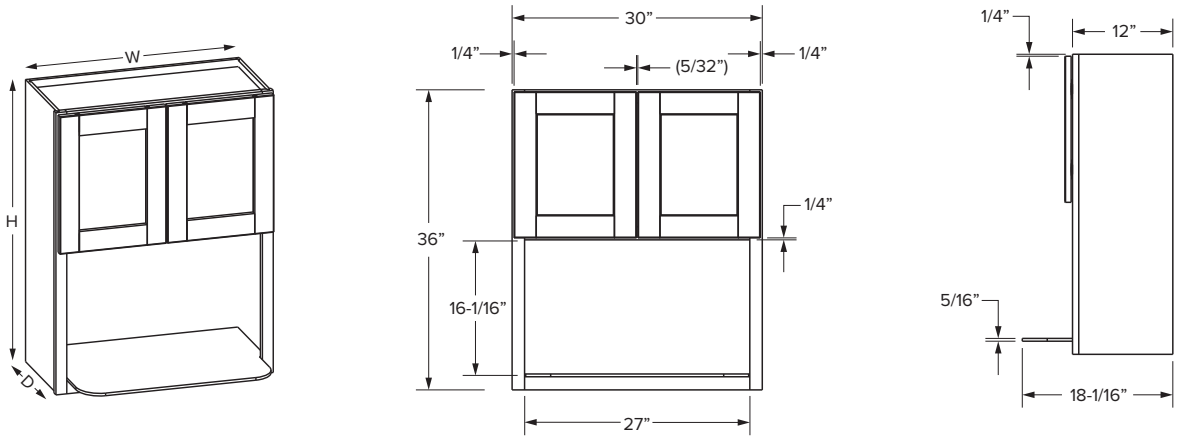

SKU	W	H	D	# of Doors	ESSENTIALS Opening Width	Opening Height	Door Opening Width	Door Opening Height	Door Size Width	Door Size Height
MWC3036	30”	36”	12”	2	27”	15-13/16”	27”	14-15/16”	13-29/32”	16-1/32”

SKU	W	H	D	# of Doors	PREMIER Opening Width	Opening Height	Door Opening Width	Door Opening Height	Door Size Width	Door Size Height
MWC3036	30”	36”	12”	2	27”	15-11/16”	27”	15-1/16”	14-11/16”	17-17/32”

Microwave cabinet enclosure

SKU	W	H	D
MWC3018	30”	18”	12”

NOTE: Works with Premier & Essentials

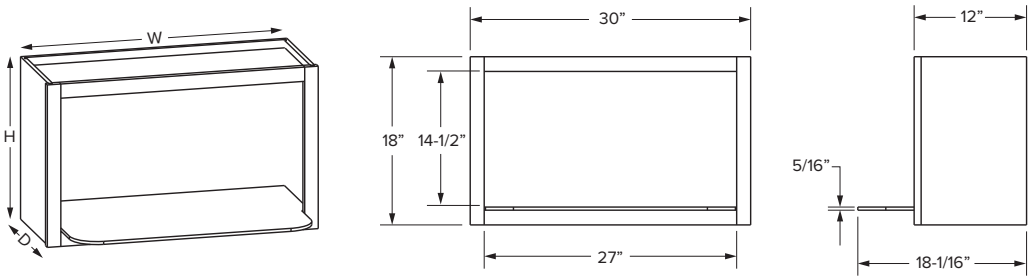

Full height cabinets

Essentials Overlay

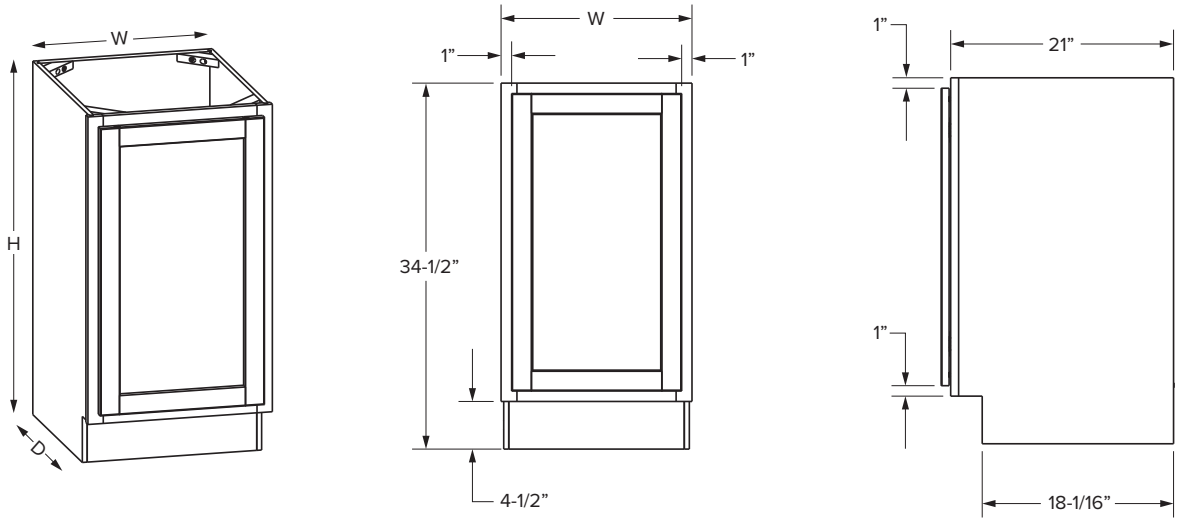

Premier Overlay

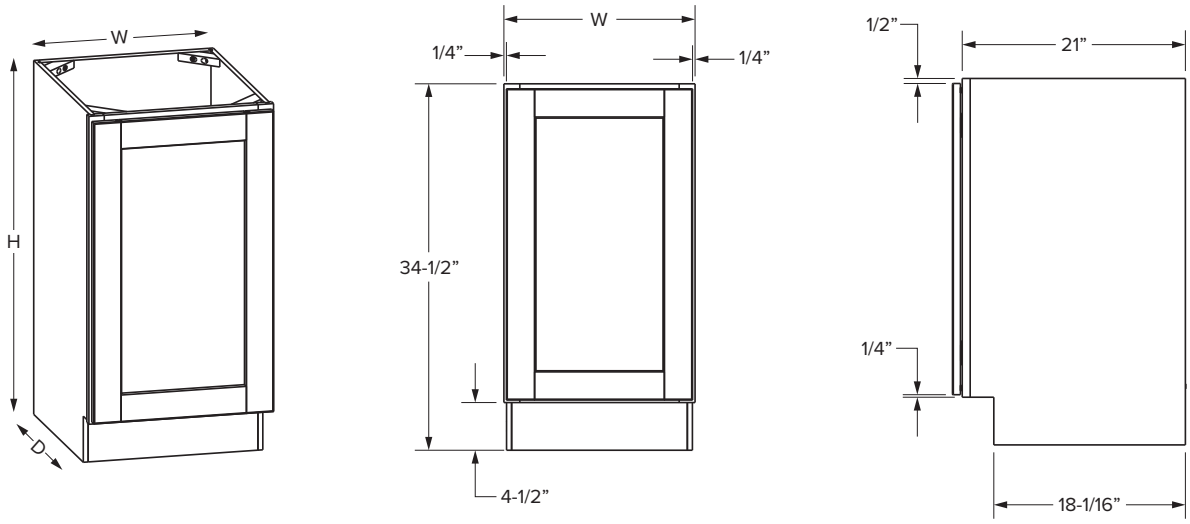

					ESSENTIALS				PREMIER			
					Opening		*Door Size*		*Opening*		*Door Size*	
SKU	W	H	D	# of Doors	Width	Height	Width	Height	Width	Height	Width	Height
VFH12	12”	34-1/2”	21”	1	9”	27”	10-1/32”	28-1/32”	9”	27”	11-17/32”	29-9/32”

Drawer/door cabinets

Essentials Overlay

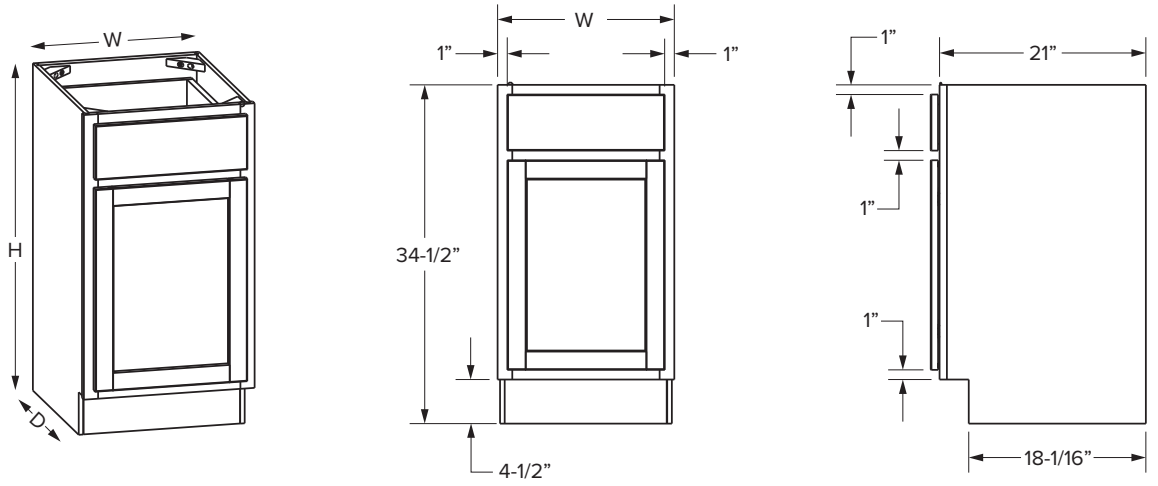

Premier Overlay

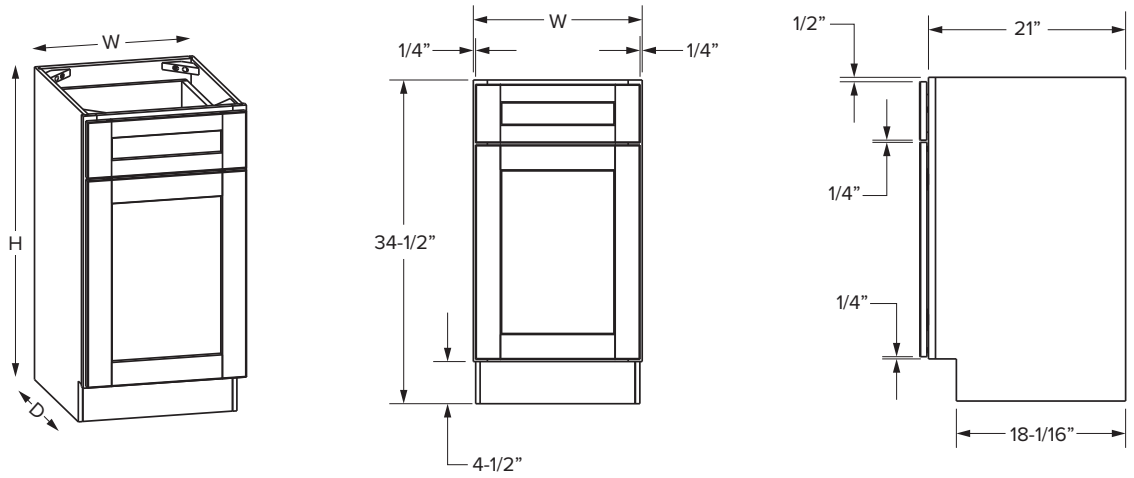

						ESSENTIALS							
						Door Opening		*Drawer Opening*		*Door Size*		*Drawer Front Size*	
SKU	**W**	**H**	**D**	**# of Doors**	**# of Drawers**	**Width**	**Height**	**Width**	**Height**	**Width**	**Height**	**Width**	**Height**
VB12	12”	34-1/2”	21”	1	1	9”	20-1/2”	9”	5”	10-1/32”	21-11/32”	10-1/32”	5-23/32”
VB15	15”	34-1/2”	21”	1	1	12”	20-1/2”	12”	5”	13-1/32”	21-11/32”	13-1/32”	5-23/32”
VB18	18”	34-1/2”	21”	1	1	15”	20-1/2”	15”	5”	16-1/32”	21-11/32”	16-1/32”	5-23/32”

						PREMIER							
						Door Opening		*Drawer Opening*		*Door Size*		*Drawer Front Size*	
SKU	**W**	**H**	**D**	**# of Doors**	**# of Drawers**	**Width**	**Height**	**Width**	**Height**	**Width**	**Height**	**Width**	**Height**
VB12	12”	34-1/2”	21”	1	1	9”	20-1/2”	9”	5”	11-17/32”	22-27/32”	11-17/32”	6-7/32”
VB15	15”	34-1/2”	21”	1	1	12”	20-1/2”	12”	5”	14-17/32”	22-27/32”	14-17/32”	6-7/32”
VB18	18”	34-1/2”	21”	1	1	15”	20-1/2”	15”	5”	17-17/32”	22-27/32”	17-17/32”	6-7/32”

Sink base cabinets

Essentials Overlay

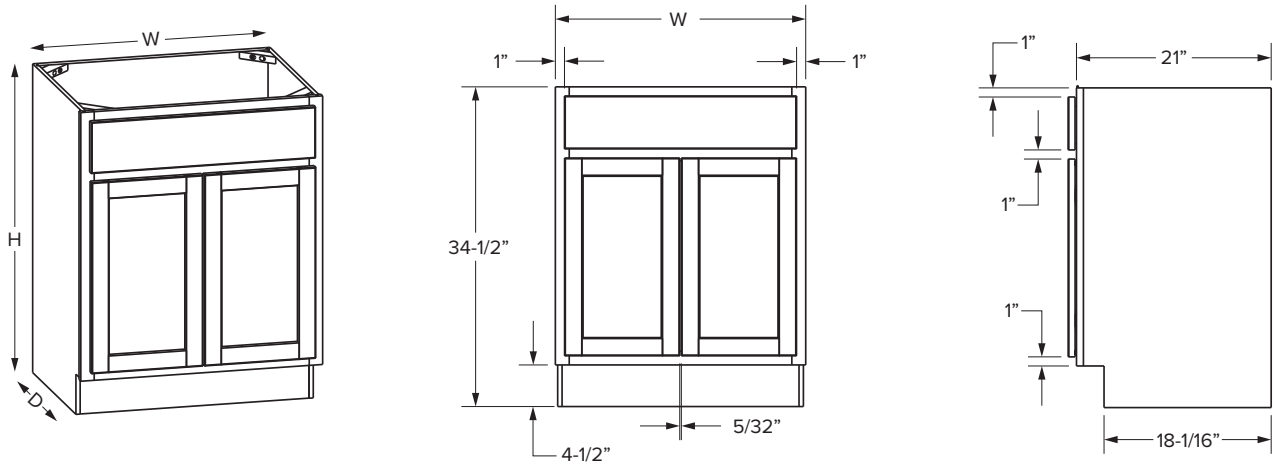

VSB48

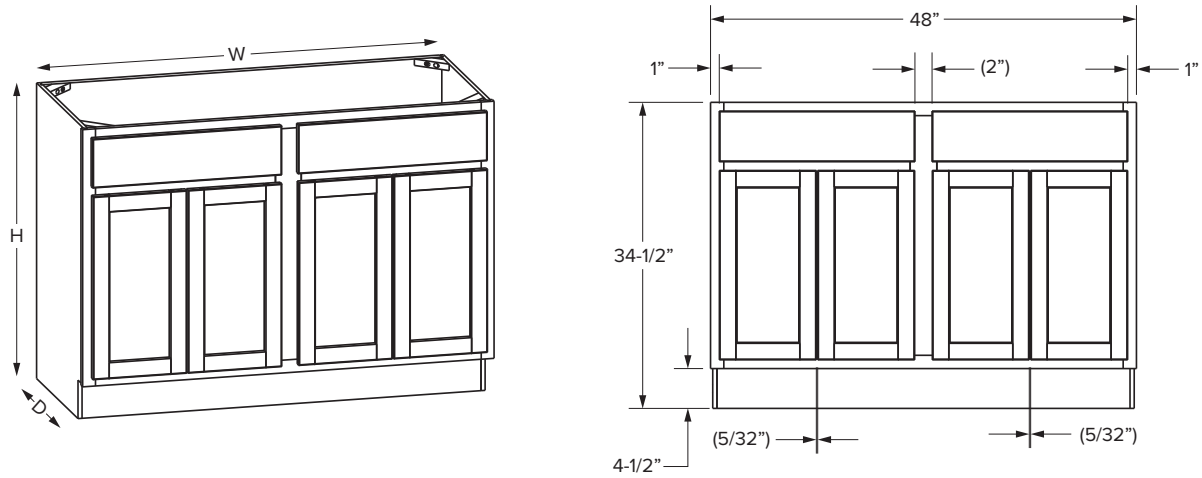

						ESSENTIALS							
						Door Opening		*False Front Opening*		*Door Size*		*Drawer Front Size*	
SKU	**W**	**H**	**D**	**# of Doors**	**# of Drawers**	**Width**	**Height**	**Width**	**Height**	**Width**	**Height**	**Width**	**Height**
VSB24	24”	34-1/2”	21”	2	1	21”	20-1/2”	21”	5”	10-15/16”	21-11/32”	22-1/16”	5-23/32”
VSB27	27”	34-1/2”	21”	2	1	24”	20-1/2”	24”	5”	12-13/32”	21-11/32”	25-1/32”	5-23/32”
VSB30	30”	34-1/2”	21”	2	1	27”	20-1/2”	27”	5”	13-29/32”	21-11/32”	28-1/32”	5-23/32”
VSB33	33”	34-1/2”	21”	2	1	30”	20-1/2”	30”	5”	15-13/32”	21-11/32”	31-1/32”	5-23/32”
VSB36	36”	34-1/2”	21”	2	1	33”	20-1/2”	33”	5”	16-29/32”	21-11/32”	34-1/32”	5-23/32”
VSB42	42”	34-1/2”	21”	2	1	17-7/8”	20-1/2”	39”	5”	18-15/16”	21-11/32”	38-7/8”	5-23/32”
VSB48	48”	34-1/2”	21”	4	2	21”	20-1/2”	31”	5”	10-15/16”	21-11/32”	22-1/16”	5-23/32”

Sink base cabinets

Premier Overlay

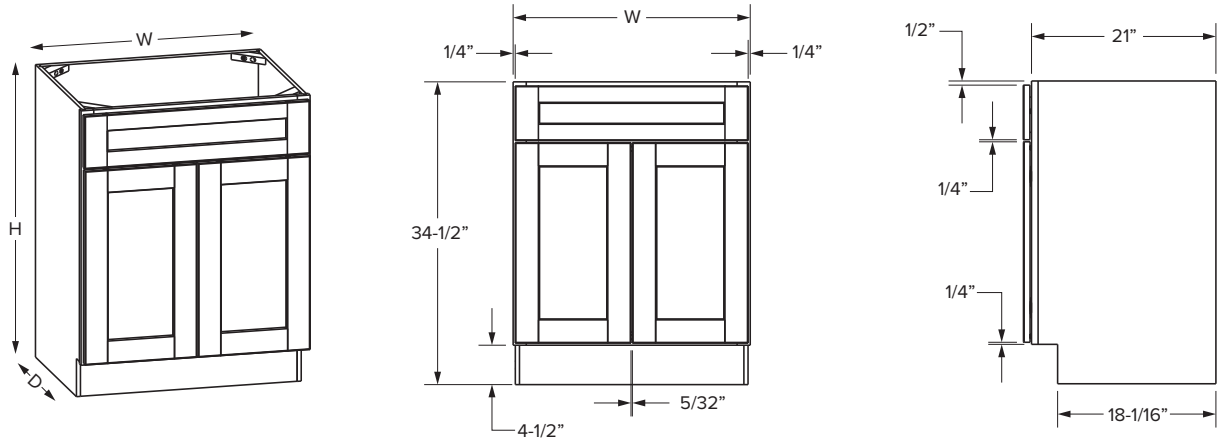

VSB48

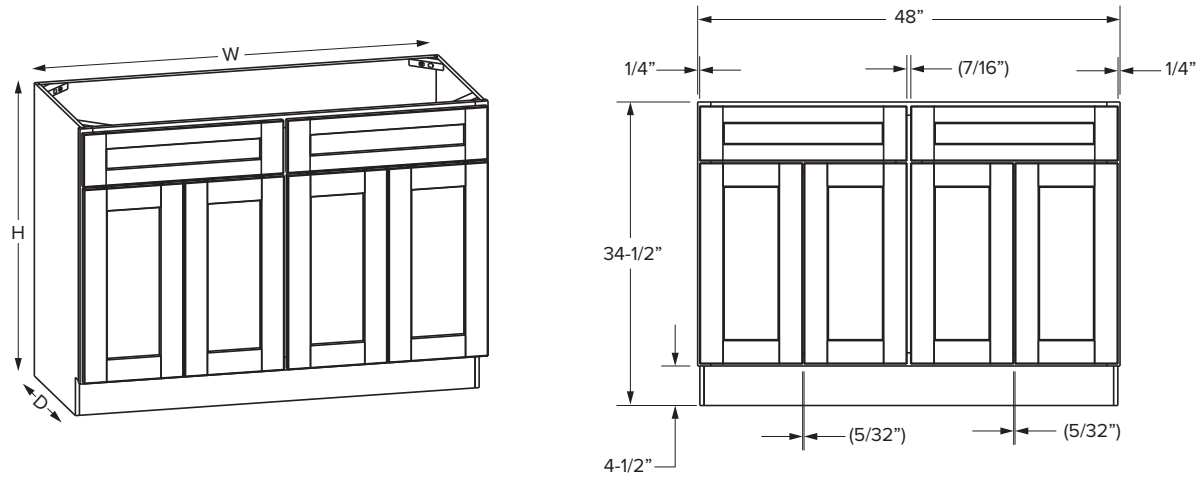

						PREMIER							
						Door Opening		*False Front Opening*		*Door Size*		*Drawer Front Size*	
SKU	W	H	D	# of Doors	# of Drawers	Width	Height	Width	Height	Width	Height	Width	Height
VSB24	24”	34-1/2”	21”	2	1	21”	20-1/2”	21”	5”	11-11/16”	22-27/32”	23-17/32”	6-7/32”
VSB27	27”	34-1/2”	21”	2	1	24”	20-1/2”	24”	5”	13-3/16”	22-27/32”	26-17/32”	6-7/32”
VSB30	30”	34-1/2”	21”	2	1	27”	20-1/2”	27”	5”	14-11/16”	22-27/32”	29-17/32”	6-7/32”
VSB33	33”	34-1/2”	21”	2	1	30”	20-1/2”	30”	5”	16-3/16”	22-27/32”	32-17/32”	6-7/32”
VSB36	36”	34-1/2”	21”	2	1	33”	20-1/2”	33”	5”	17-11/16”	22-27/32”	35-17/32”	6-7/32”
VSB42	42”	34-1/2”	21”	2	1	17-7/8”	20-1/2”	39”	5”	20-17/32”	22-27/32”	41-17/32”	6-7/32”
VSB48*	48”	34-1/2”	21”	4	2	12-3/16”	20-1/2”	20-7/8”	5”	11-11/16”	22-27/32”	23-17/32”	6-7/32”

Vanity sink base cabinets

Essentials Overlay

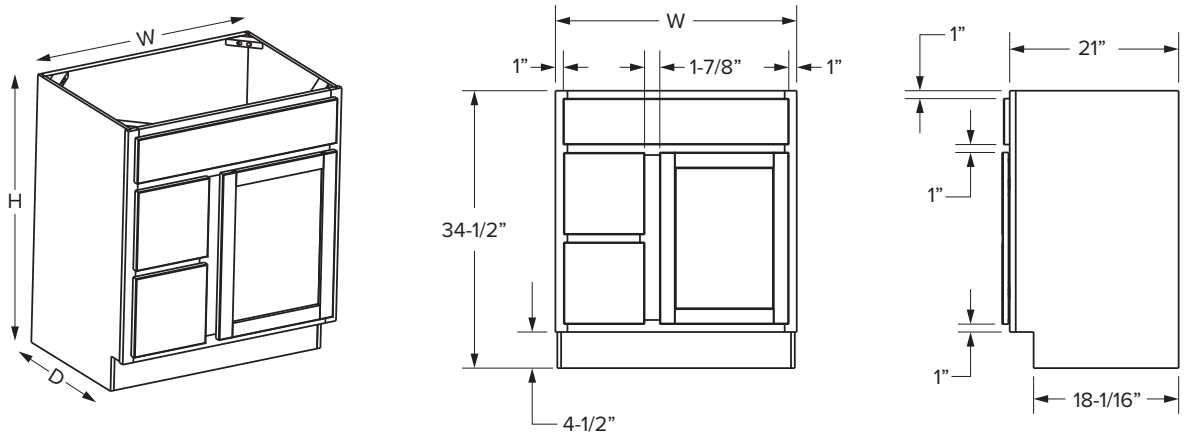

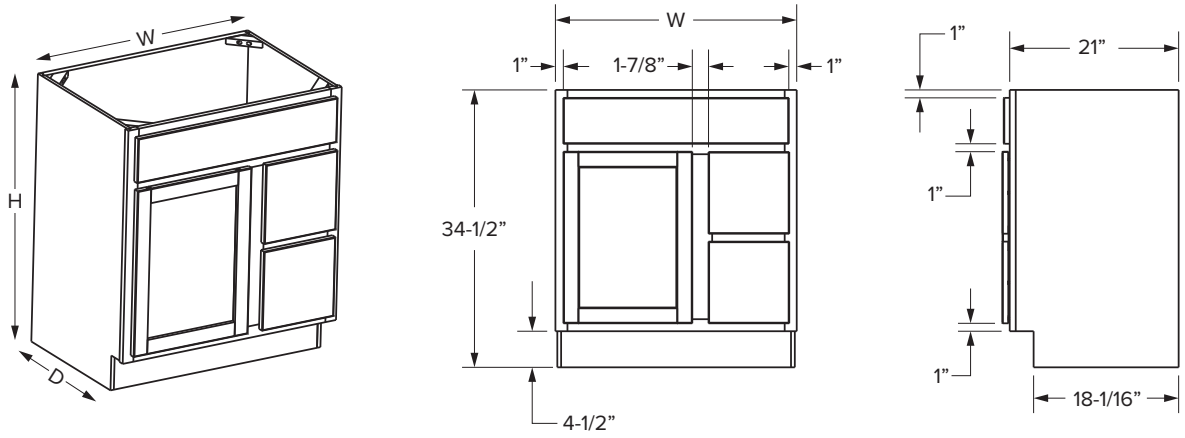

					ESSENTIALS									
					Door Opening		*Drawer Opening*		*Door Size*		*Drawer Front Size*		*False Front Opening*	
SKU	**W**	**H**	**D**	**# of Drawers**	**Width**	**Height**	**Width**	**Height**	**Width**	**Height**	**Width**	**Height**	**Width**	**Height**
VSDB30L	30”	34-1/2”	21”	2	15”	20-1/2”	9”	9-3/16”	16”	21-5/16”	10-1/16”	10-3/16”	27”	5”
VSDB30R	30”	34-1/2”	21”	2	15”	20-1/2”	9”	9-3/16”	16”	21-5/16”	10-1/16”	10-3/16”	27”	5”
VSDB36L	36”	34-1/2”	21”	2	18”	20-1/2”	12”	9-3/16”	19”	21-5/16”	13-1/16”	10-3/16”	33”	5”
VSDB36R	36”	34-1/2”	21”	2	18”	20-1/2”	12”	9-3/16”	19”	21-5/16”	13-1/16”	10-3/16”	33”	5”

Vanity sink base cabinets

Premier Overlay

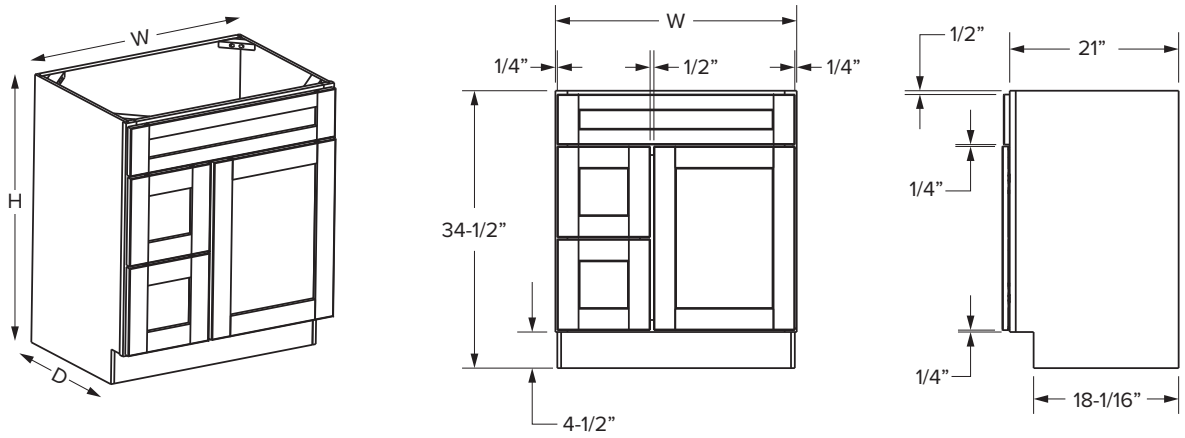

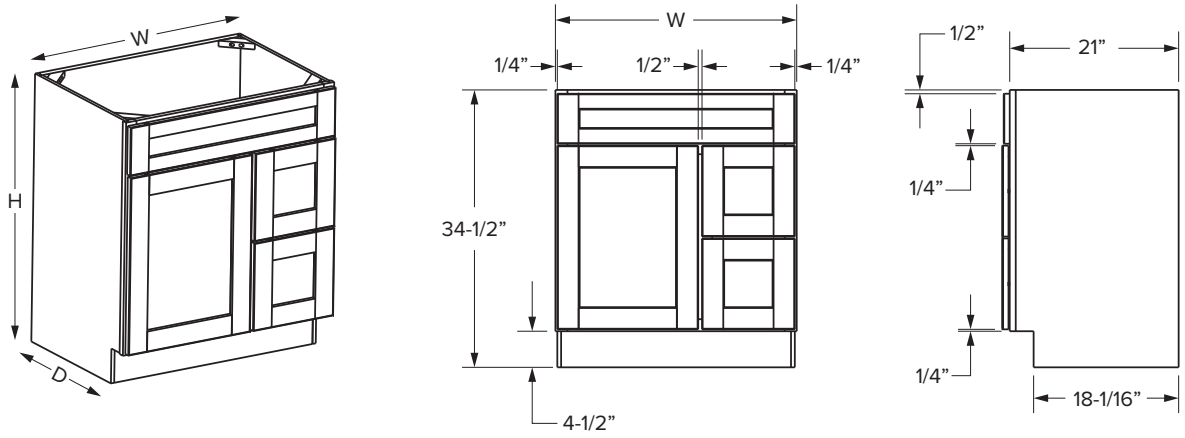

					PREMIER									
					Door Opening		*Drawer Opening*		*Door Size*		*Drawer Front Size*		*False Front Opening*	
SKU	**W**	**H**	**D**	**# of Drawers**	**Width**	**Height**	**Width**	**Height**	**Width**	**Height**	**Width**	**Height**	**Width**	**Height**
VSDB30L	30”	34-1/2”	21”	2	15”	20-1/2”	9”	9”	17-1/2”	22-13/16”	11-9/16”	11-5/16”	27”	5”
VSDB30R	30”	34-1/2”	21”	2	15”	20-1/2”	9”	9”	17-1/2”	22-13/16”	11-9/16”	11-5/16”	27”	5”
VSDB36L	36”	34-1/2”	21”	2	18”	20-1/2”	12”	9”	20-9/16”	22-13/16”	14-1/2”	11-5/16”	33”	5”
VSDB36R	36”	34-1/2”	21”	2	18”	20-1/2”	12”	9”	20-9/16”	22-13/16”	14-1/2”	11-5/16”	33”	5”

Three drawer cabinets

Essentials Overlay

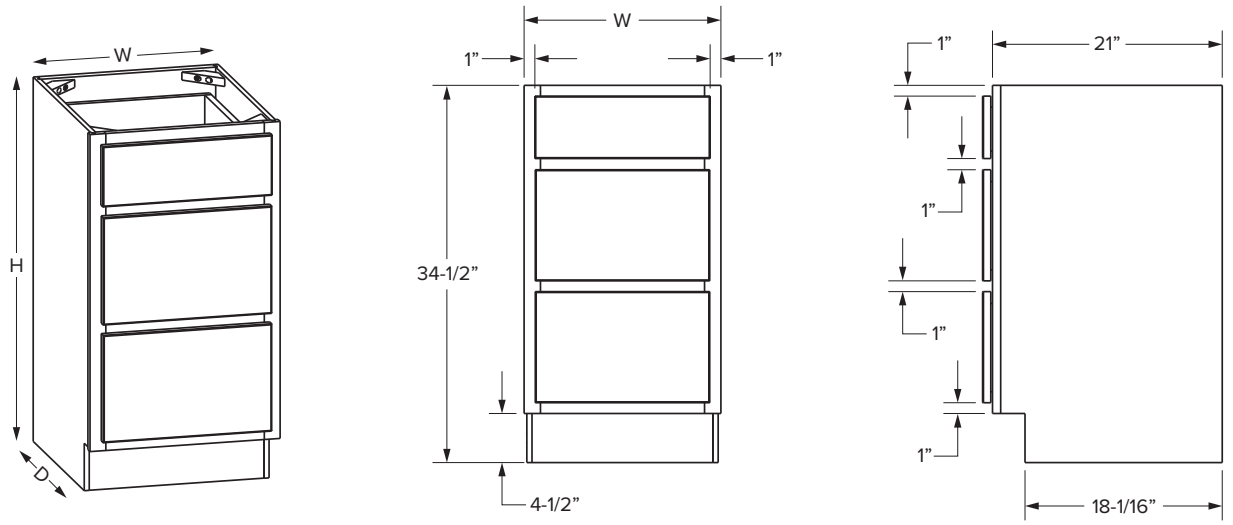

Premier Overlay

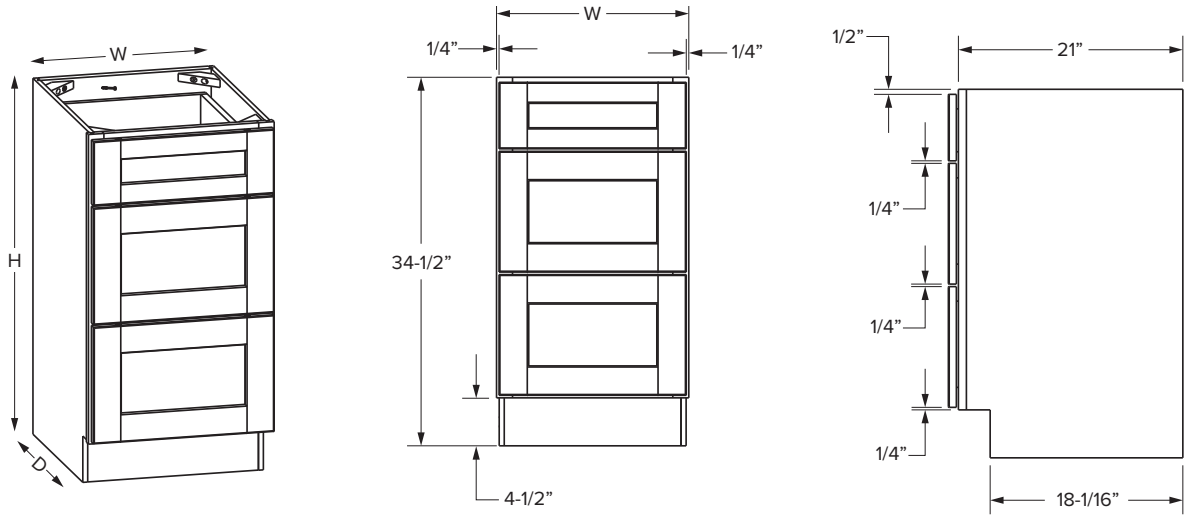

					ESSENTIALS							
					Drawer Opening				*Drawer Front Size*			
SKU	W	H	D	# of Drawers	Width	1 Height	2 Height	3 Height	Width	1 Height	2 Height	3 Height
VDB12-3	12”	34-1/2”	21”	3	9”	5”	9-3/8”	9-3/16”	10-1/32”	5-23/32”	10-5/32”	10-5/32”
VDB15-3	15”	34-1/2”	21”	3	12”	5”	9-3/8”	9-3/16”	13-1/32”	5-23/32”	10-5/32”	10-5/32”
VDB18-3	18”	34-1/2”	21”	3	15”	5”	9-3/8”	9-3/16”	16-1/32”	5-23/32”	10-5/32”	10-5/32”
VDB21-3	21”	34-1/2”	21”	3	18”	5”	9-3/8”	9-3/16”	19-1/32”	5-23/32”	10-5/32”	10-5/32”

					PREMIER							
					Drawer Opening				*Drawer Front Size*			
SKU	W	H	D	# of Drawers	Width	1 Height	2 Height	3 Height	Width	1 Height	2 Height	3 Height
VDB12-3	12”	34-1/2”	21”	3	9”	5”	9”	9-9/16”	11-17/32”	6-7/32”	11-5/16”	11-5/16”
VDB15-3	15”	34-1/2”	21”	3	12”	5”	9”	9-9/16”	14-17/32”	6-7/32”	11-5/16”	11-5/16”
VDB18-3	18”	34-1/2”	21”	3	15”	5”	9”	9-9/16”	17-17/32”	6-7/32”	11-5/16”	11-5/16”
VDB21-3	21”	34-1/2”	21”	3	18”	5”	9”	9-9/16”	20-17/32”	6-7/32”	11-5/16”	11-5/16”

Top drawer combo cabinets

Essentials Overlay

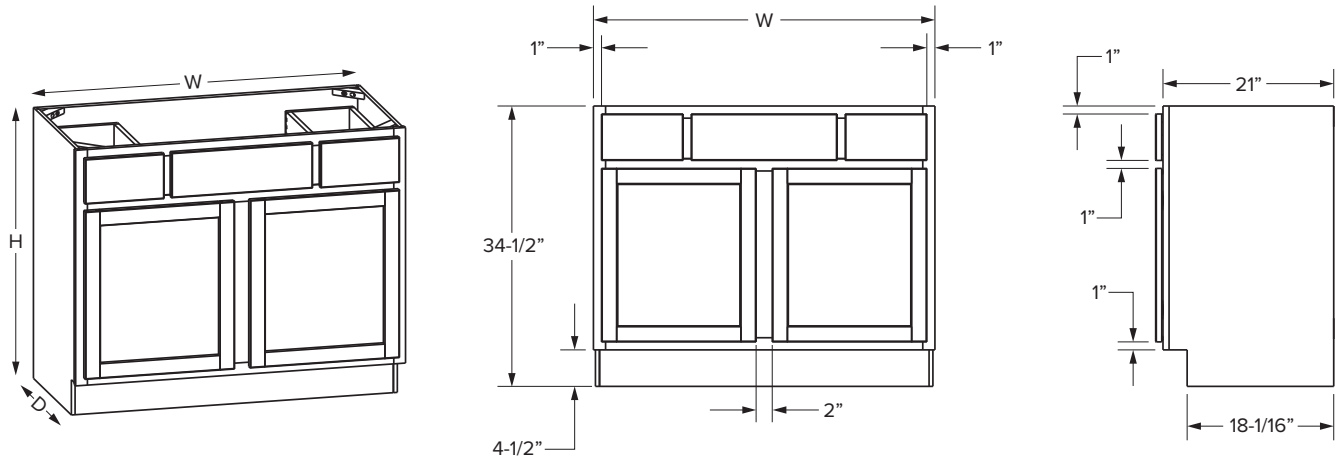

Premier Overlay

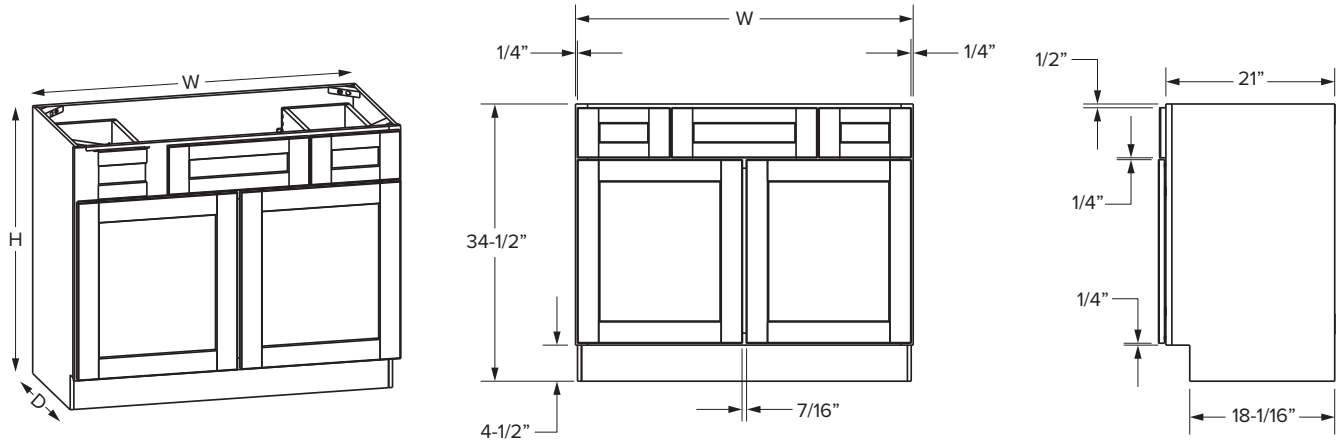

				ESSENTIALS											
				Door Opening		*1 False Front Opening*		*2 Drawer Opening*		*Door Size*		*1 False Front Size*		*2 Drawer Front Size*	
SKU	**W**	**H**	**D**	**Width**	**Height**	**Width**	**Height**	**Width**	**Height**	**Width**	**Height**	**Width**	**Height**	**Width**	**Height**
VBTD36	36”	34-1/2”	21”	33”	20-1/2”	12-3/8”	5”	7-5/16”	5”	16-29/32”	21-11/32”	15-11/32”	5-23/32”	8-11/32”	5-23/32”
VBTD42*	42”	34-1/2”	21”	17-15/16”	20-1/2”	15”	5”	9”	5”	19-1/32”	21-11/32”	17-15/16”	5-23/32”	10-1/32”	5-23/32”
VBTD48*	48”	34-1/2”	21”	20-15/16”	20-1/2”	15”	5”	12”	5”	22”	21-11/32”	17-15/16”	5-23/32”	13-1/32”	5-23/32”

*42” and 48” wide cabinets have a center stile

				PREMIER											
				Door Opening		*1 False Front Opening*		*2 Drawer Opening*		*Door Size*		*1 False Front Size*		*2 Drawer Front Size*	
SKU	**W**	**H**	**D**	**Width**	**Height**	**Width**	**Height**	**Width**	**Height**	**Width**	**Height**	**Width**	**Height**	**Width**	**Height**
VBTD36	36”	34-1/2”	21”	33”	20-1/2”	12-3/8”	5”	7-5/16”	5”	17-11/16”	22-27/32”	15-1/2”	6-7/32”	9-27/32”	6-7/32”
VBTD42*	42”	34-1/2”	21”	17-15/16”	20-1/2”	15”	5”	9”	5”	20-17/32”	22-27/32”	18-5/32”	6-7/32”	11-17/32”	6-7/32”
VBTD48*	48”	34-1/2”	21”	20-15/16”	20-1/2”	15”	5”	12”	5”	23-17/32”	22-27/32”	18-5/32”	6-7/32”	14-17/32”	6-7/32”

*42” and 48” wide cabinets have a center stile

Combo cabinets

Essentials Overlay

VCDB60-3

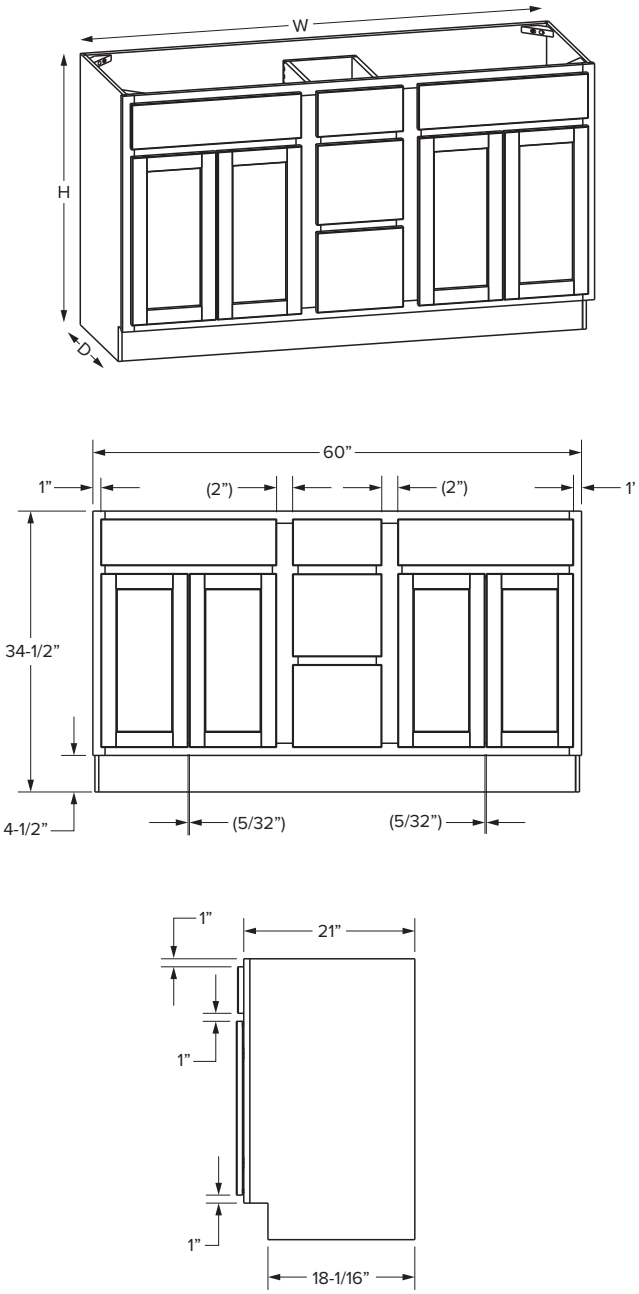

VCDB60-6

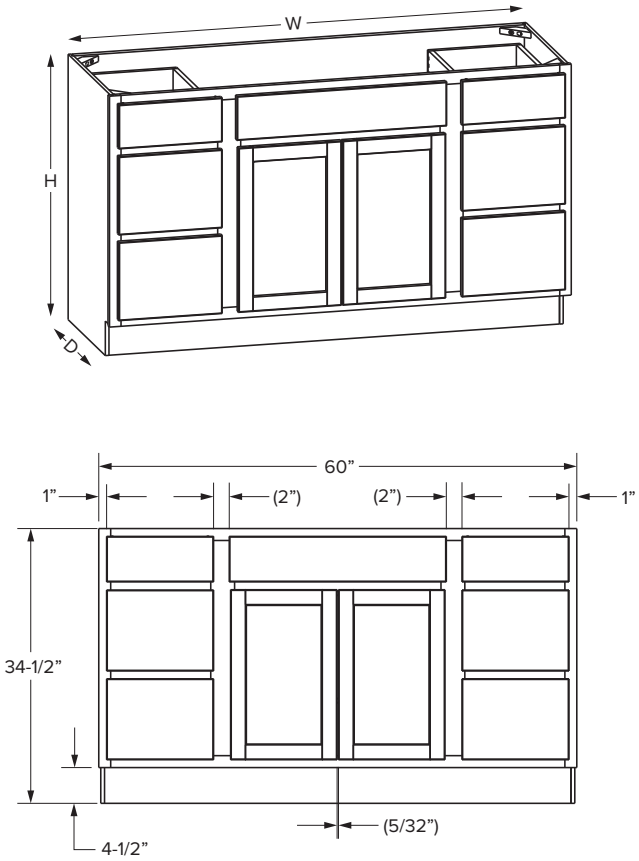

				ESSENTIALS														
				Door Opening		*Drawer Opening*				*False Front Opening*		*Door Size*		*Drawer Front Size*			*False Front Size*	
SKU	**W**	**H**	**D**	**Width**	**Height**	**Width**	**2 Height**	**3 Height**	**4 Height**	**Width**	**1 Height**	**Width**	**Height**	**Width**	**2 Height**	**3&4 Height**	**Width**	**1 Height**
VCDB60-3	60”	34-1/2”	21”	20-1/2”	20-1/2”	9-3/4”	5”	9-3/8”	9-3/16”	20-1/2”	5”	10-11/16”	21-11/32”	10-15/16”	5-23/32”	10-5/32”	21-9/16”	5-23/32”
VCDB60-6	60”	34-1/2”	21”	25-7/8”	20-1/2”	12-7/16”	5”	9-3/8”	9-3/16”	25-7/8”	5”	13-3/8”	21-11/32”	13-7/16”	5-23/32”	10-5/32”	27-1/4”	5-23/32”

Combo cabinets

Premier Overlay

VCDB60-3

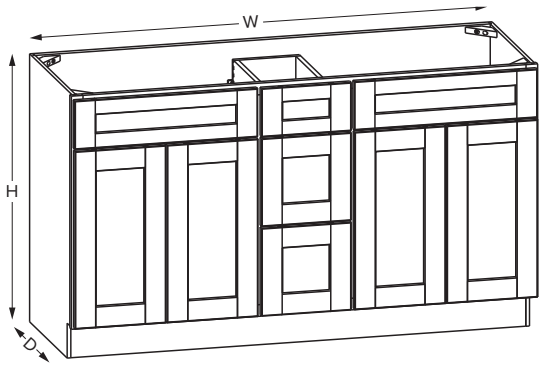

VCDB60-6

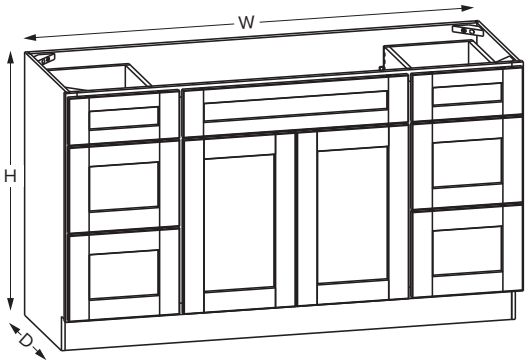

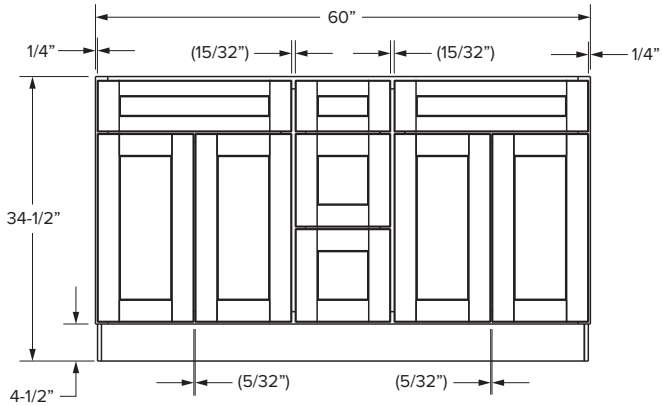

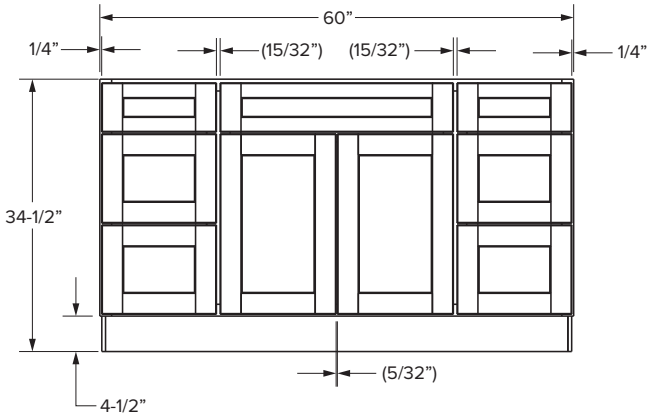

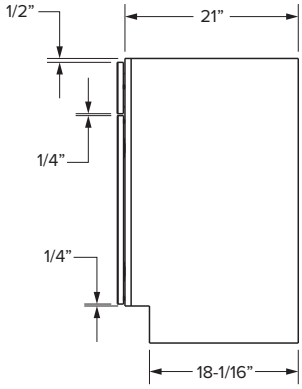

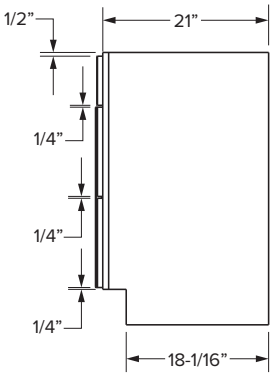

				PREMIER														
				Door Opening		*Drawer Opening*				*False Front Opening*		*Door Size*		*Drawer Front Size*			*False Front Size*	
SKU	W	H	D	Width	Height	Width	2 Height	3 Height	4 Height	Width	1 Height	Width	Height	Width	2 Height	3&4 Height	Width	1 Height
VCDB60-3	60”	34-1/2”	21”	21”	20-1/2”	9-3/4”	5”	9”	9-1/2”	21”	5”	11-11/16”	22-27/32”	11-17/32”	6-7/32”	11-5/16”	23-17/32”	6-7/32”
VCDB60-6	60”	34-1/2”	21”	27”	20-1/2”	12-7/16”	5”	9”	9-1/2”	27”	5”	14-11/16”	22-27/32”	14-17/32”	6-7/32”	11-5/16”	29-17/32”	6-7/32”

Linen cabinets

Essentials Overlay

VL1584/VL1884

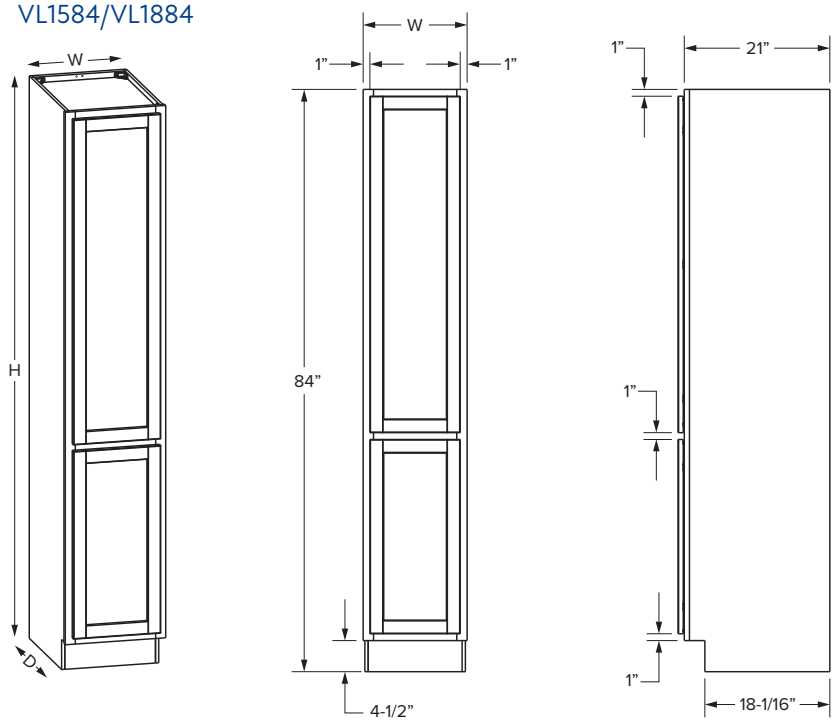

VL2484

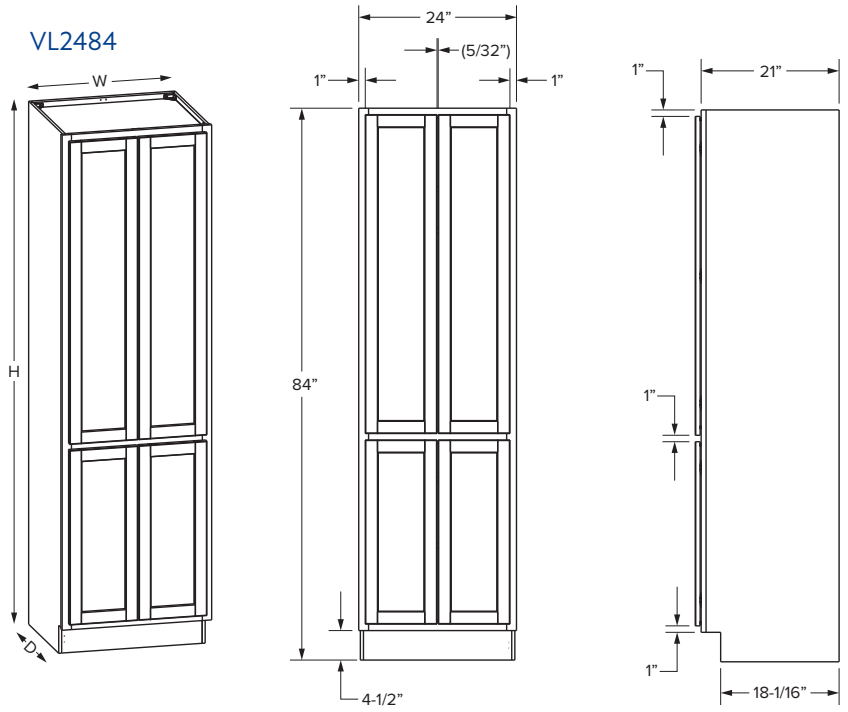

SKU Assembled / Unassembled	W	H	D	Shelves	# of Doors	ESSENTIALS Door Opening Width	1 Height	2 Height	Door Size Width	1 Height	2 Height
XVL1584**L/R**[¥] / VL1584	15”	84”	21”	6	2	12”	27”	47-1/2”	13-1/32”	48-17/32”	28-1/32”
XVL1884**L/R**[¥] / VL1884	18”	84”	21”	6	2	15”	27”	47-1/2”	16-1/32”	48-17/32”	28-1/32”
VL2484	24”	84”	21”	6	4	21”	27”	47-1/2”	10-27/32”	48-17/32”	28-1/32”

[¥]Hinged left (L) or hinged right (R) designation is required for assembled single-door linen cabinets. Please add to the part number before the finish code.

Linen cabinets

Premier Overlay

VL1584/VL1884

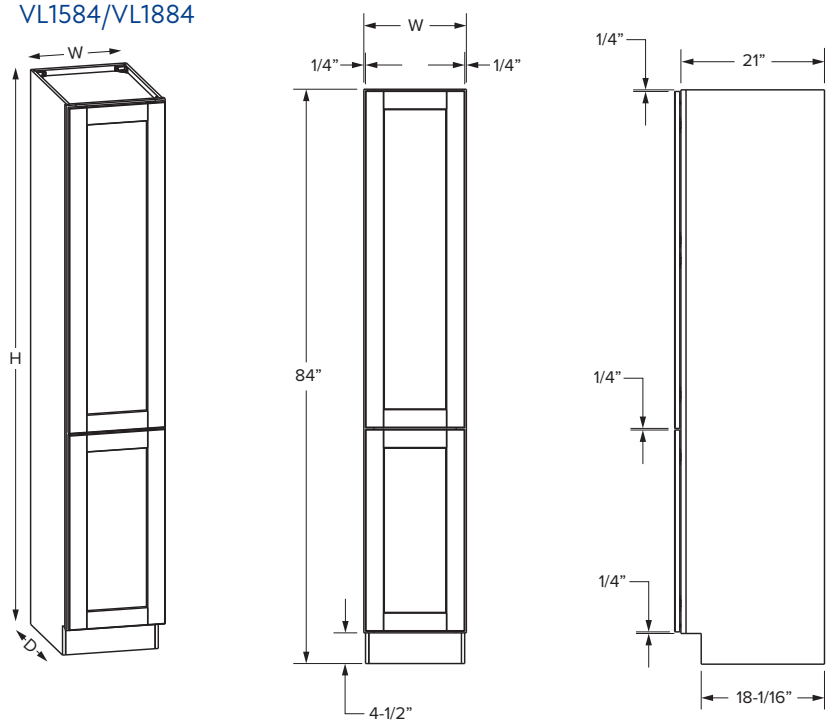

VL2484

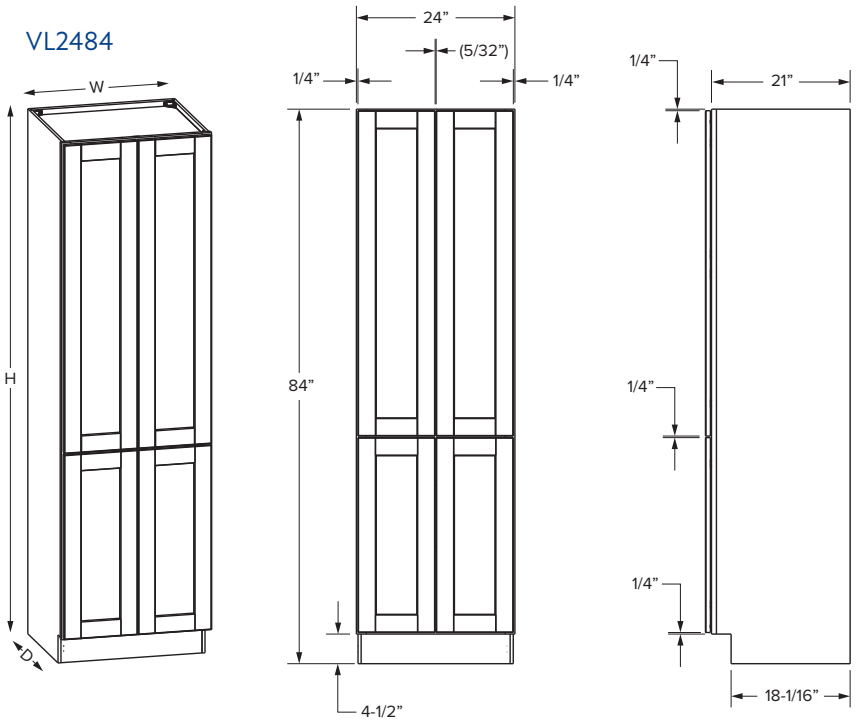

SKU Assembled / Unassembled	W	H	D	Shelves	# of Doors	PREMIER Door Opening Width	1 Height	2 Height	Door Size Width	1 Height	2 Height
XVL1584**L/R**[¥] / VL1584	15”	84”	21”	6	2	12”	27”	47-1/2”	14-17/32”	49-9/32”	29-17/32”
XVL1884**L/R**[¥] / VL1884	18”	84”	21”	6	2	15”	27”	47-1/2”	17-17/32”	49-9/32”	29-17/32”
VL2484	24”	84”	21”	6	4	21”	27”	47-1/2”	11-11/16”	49-9/32”	29-17/32”

[¥]Hinged left (L) or hinged right (R) designation is required for assembled single-door linen cabinets. Please add to the part number before the finish code.

Range hoods

	W	H	D	Projection
RHAR36	36”	24”	15”	7-1/2”
RHCL36	36”	24”	15”	7-1/2”

NOTES:
Works with Premier & Essentials.
The box of these range hoods can be trimmed to size.
Angled hood section can be removed from box and applied separately.
Some assembly required.

RHAR36

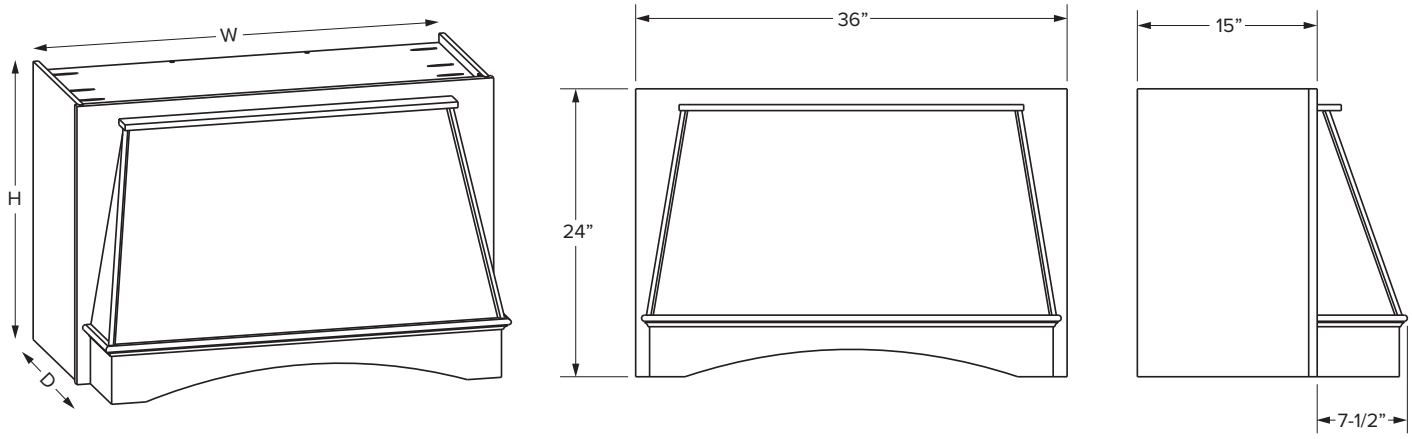

RHCL36

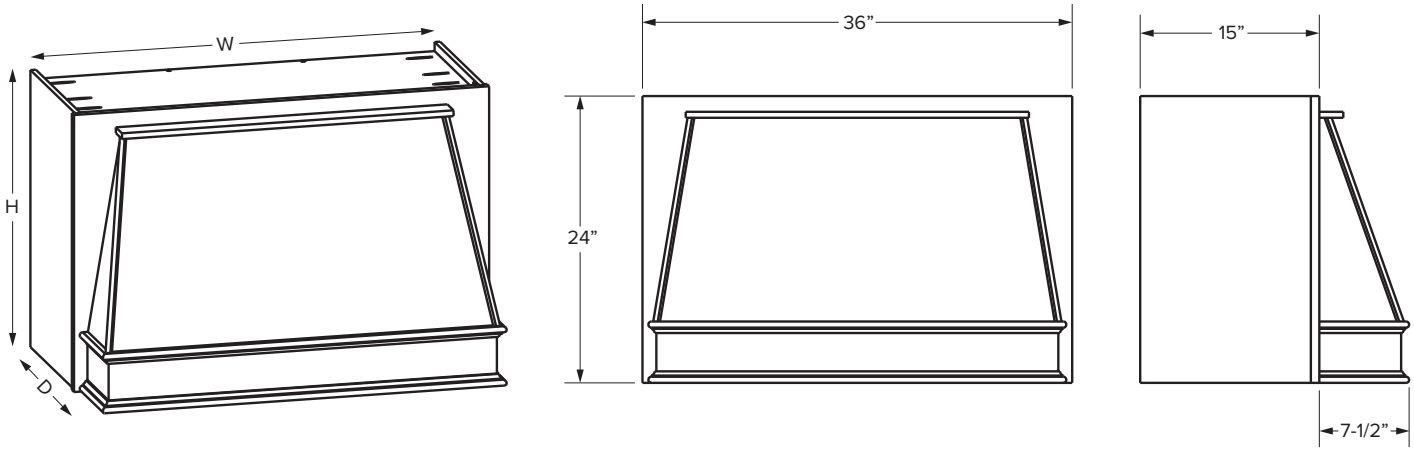

Knee drawer

	ESSENTIALS			PREMIER		
SKU	W	H	D	W	H	D
KD30	30”	6-11/16”	21”	30”	6-11/16”	21”

Essentials Overlay

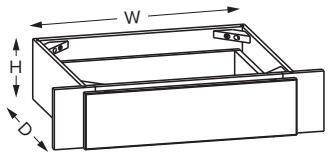

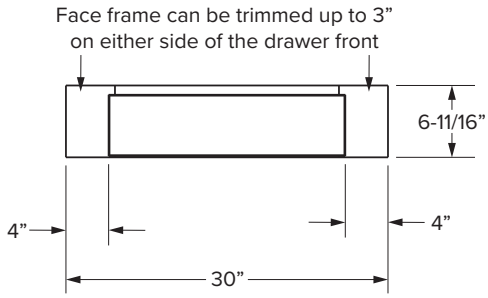

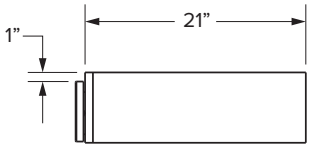

Premier Overlay

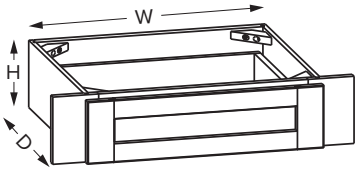

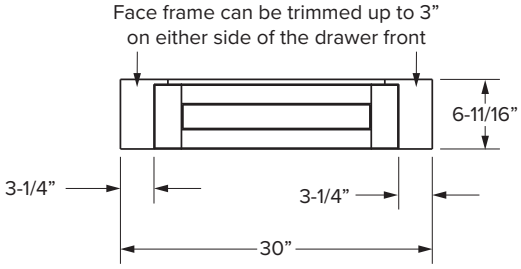

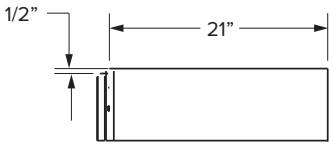

Slotted organizer

SKU	W	D	H
ORG36	36”	12”	6”

NOTE: Ships preassembled

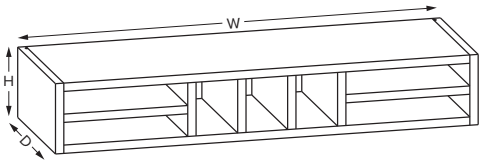

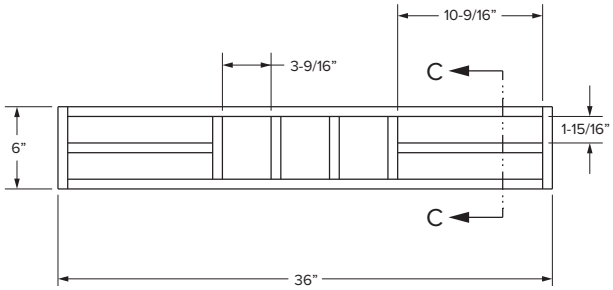

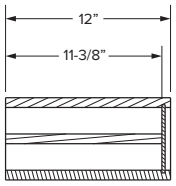

SECTION C-C

Plate rack

SKU	W	D	H
PR3015	30”	12”	15”

NOTE: Ships preassembled

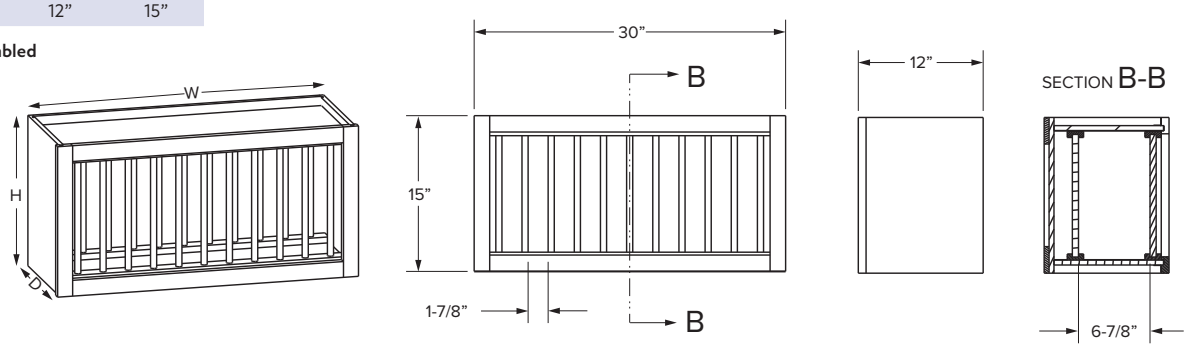

Wine rack

SKU	W	D	H
WR3015	30”	12”	15”

NOTE: Ships preassembled

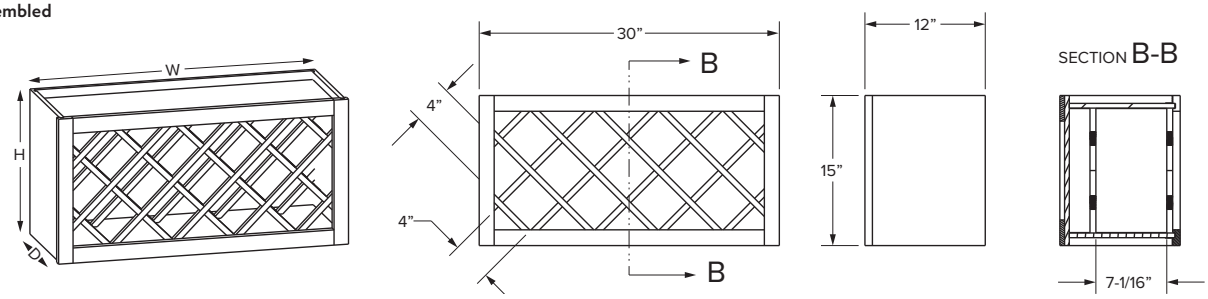

Valance arched

SKU	W	D	H
VAR36	36”	3/4”	6”
VAR48	48”	3/4”	6”

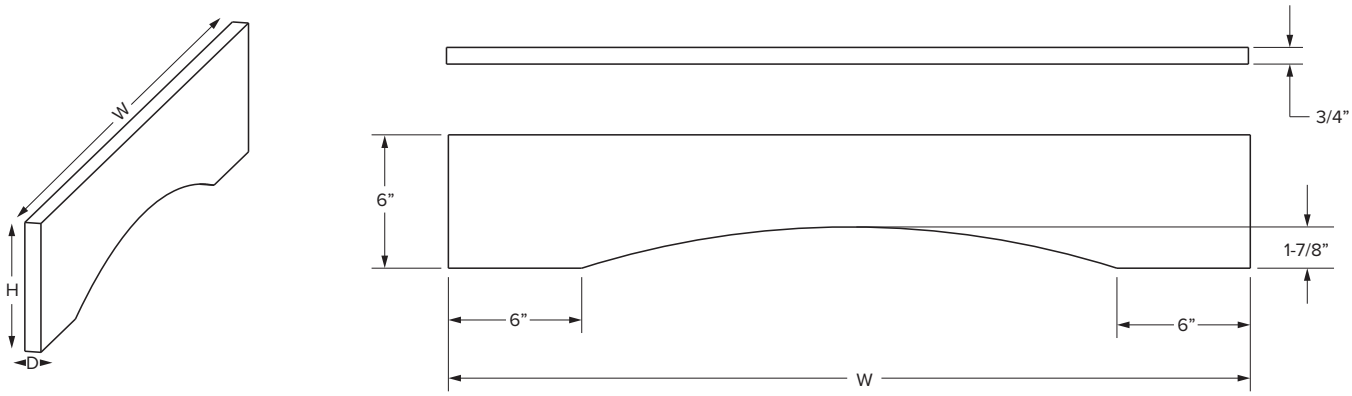

Valance scalloped

SKU	W	D	H
VSC48	48”	3/4”	6”

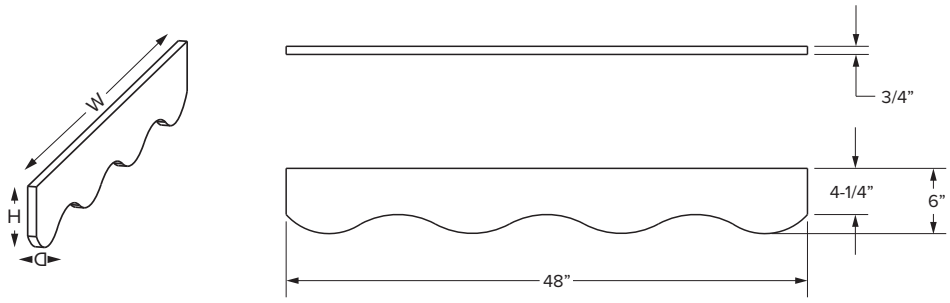

Back panel – beaded

SKU	T	H	L	Grain
PBBH4896	1/4”	48”	96”	horizontal

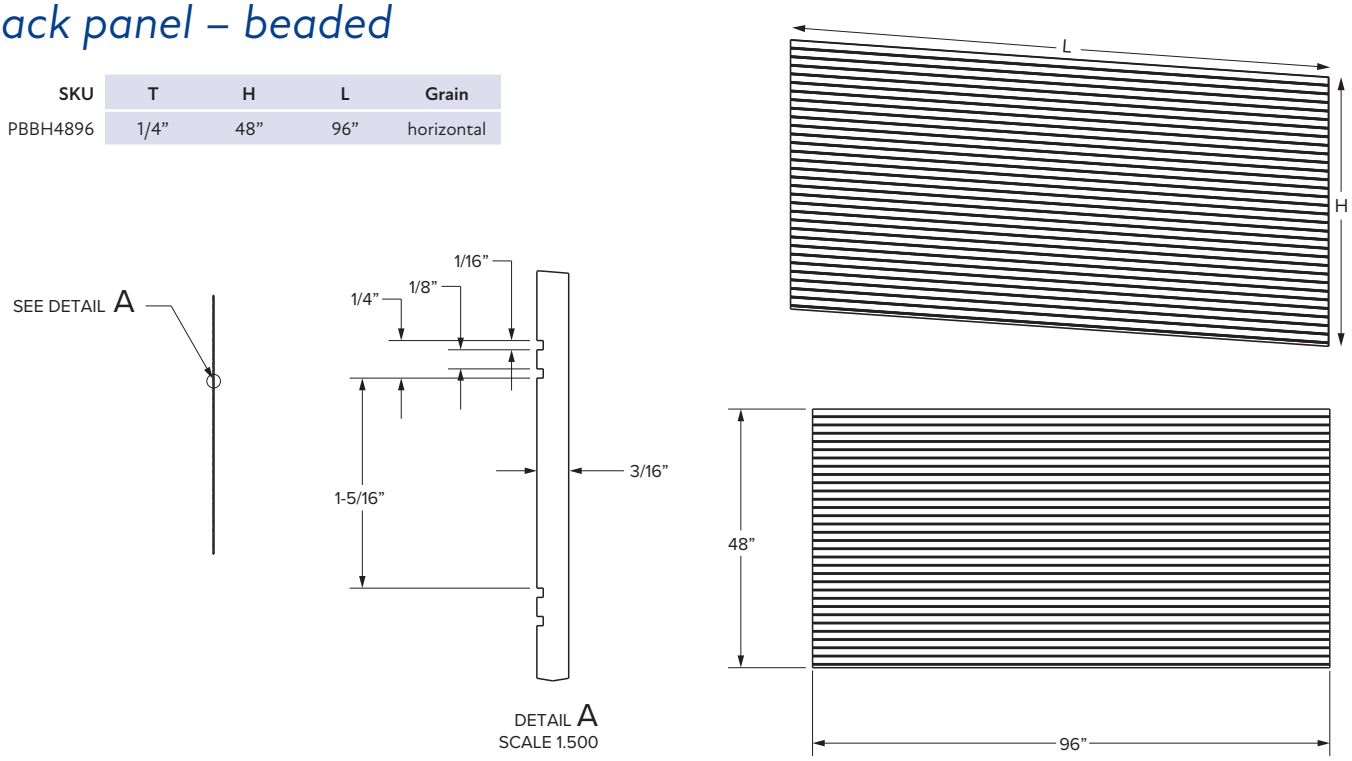

Back panels

SKU	T	H	L	Grain
PH3696	1/4”	36”	96”	horizontal
PV3648	1/4”	36”	48”	vertical
PV4896	1/4”	48”	96”	vertical

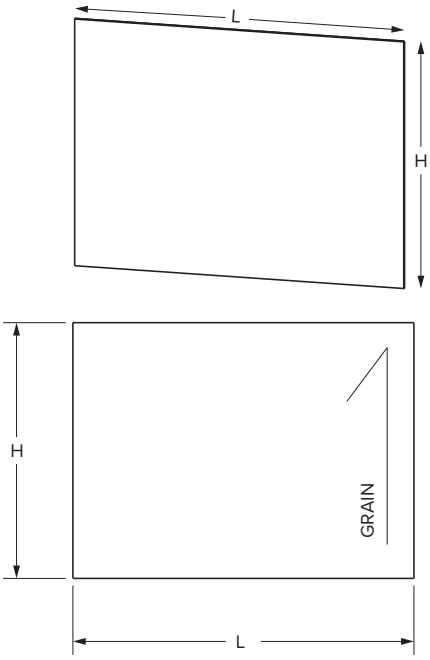

PV3648/PV4896

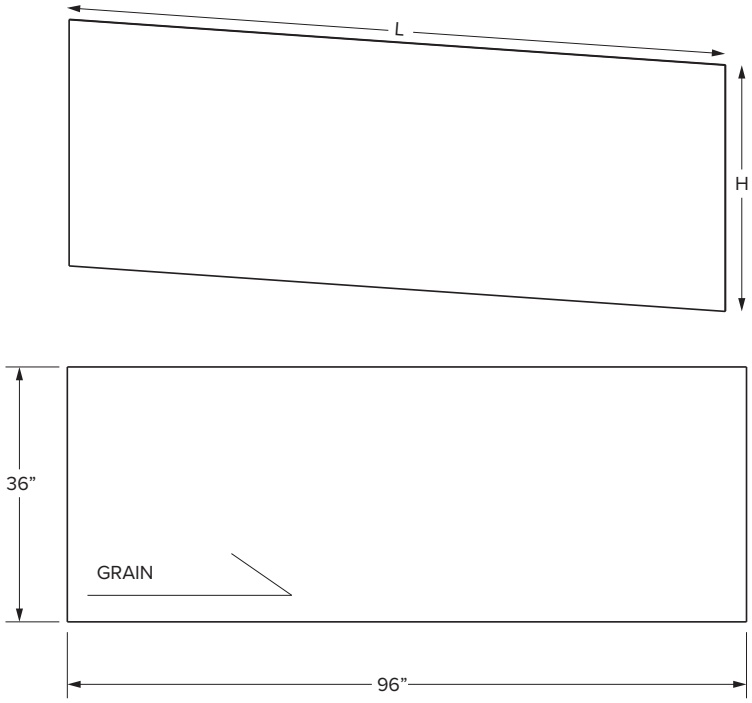

PH3696

Decorative Full Height Door Fronts

(Doors without hinge holes for Pullout Organizers)

	ESSENTIALS			PREMIER		
SKU	W	H	T	W	H	T
BFH09NB	7-1/32”	28-1/32”	3/4”	8-17/32”	29-9/32”	3/4”
BFH12NB	10-1/32”	28-1/32”	3/4”	11-17/32”	29-9/32”	3/4”
BFH15NB	13-1/32”	28-1/32”	3/4”	14-17/32”	29-9/32”	3/4”
BFH18NB	16-1/32”	28-1/32”	3/4”	17-17/32”	29-9/32”	3/4”

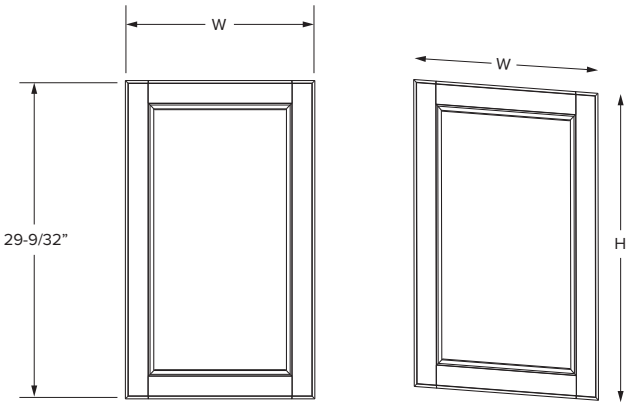

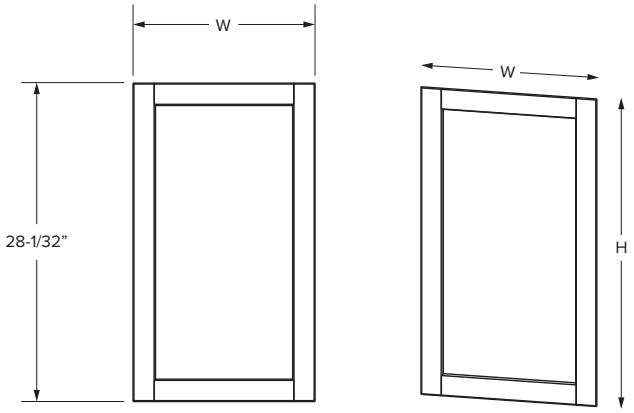

Essentials Overlay

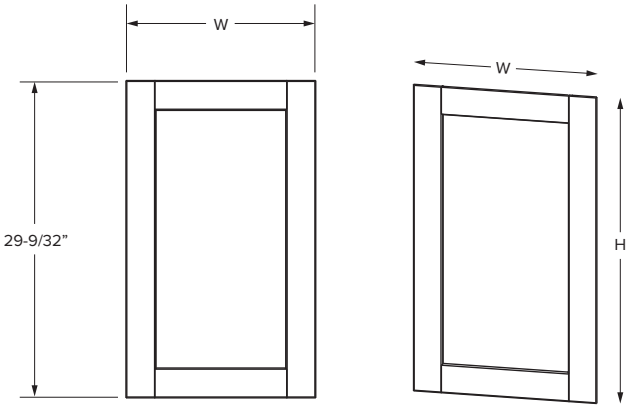

Premier Overlay

Decorative end panels

	ESSENTIALS			PREMIER		
SKU	W	H	T	W	H	T
WDEP1230	11-1/8”	27-31/32’	3/4”	11-1/8”	29-1/2”	3/4”
WDEP1236	11-1/8”	33-31/32’	3/4”	11-1/8”	35-1/2”	3/4”
WDEP1242	11-1/8”	39-31/32’	3/4”	11-1/8”	41-1/2”	3/4”
BDEP24	23-1/8”	28-1/32’	3/4”	23-1/8”	29-5/16”	3/4”

Catalina - WDEP

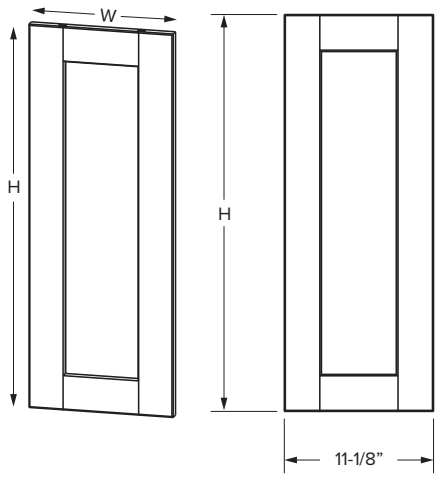

Maui - WDEP

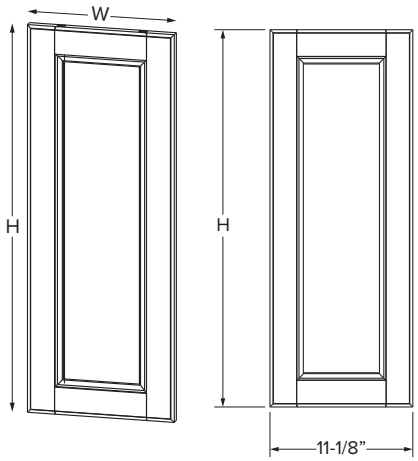

Hatteras - WDEP

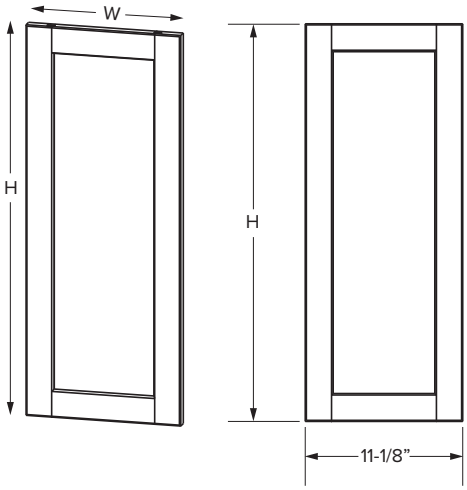

Catalina - BDEP

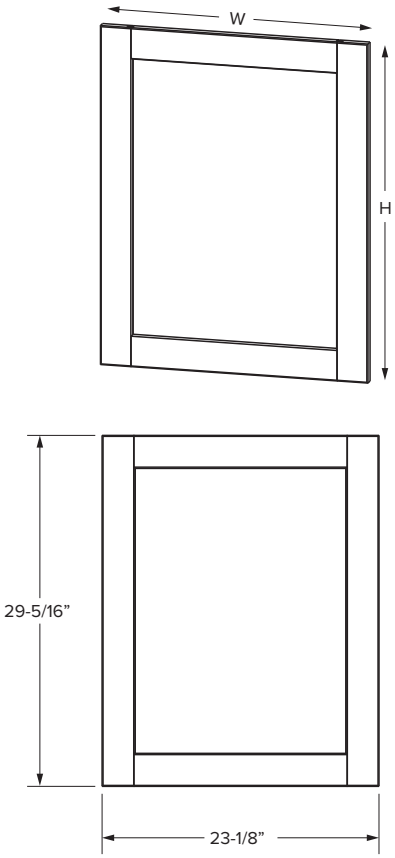

Maui - BDEP

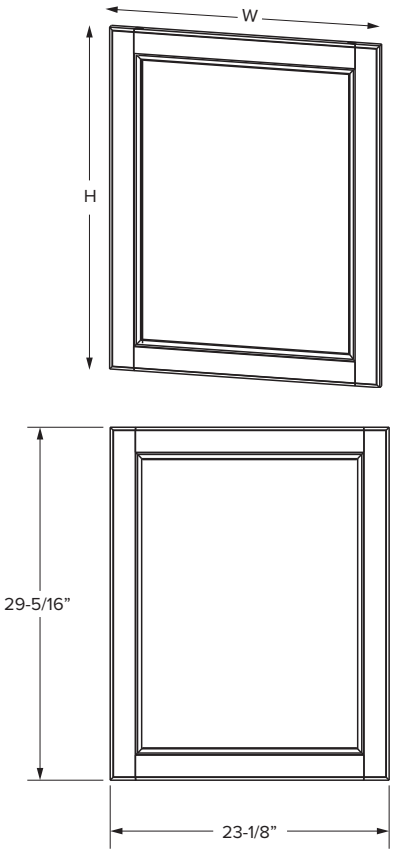

Hatteras - BDEP

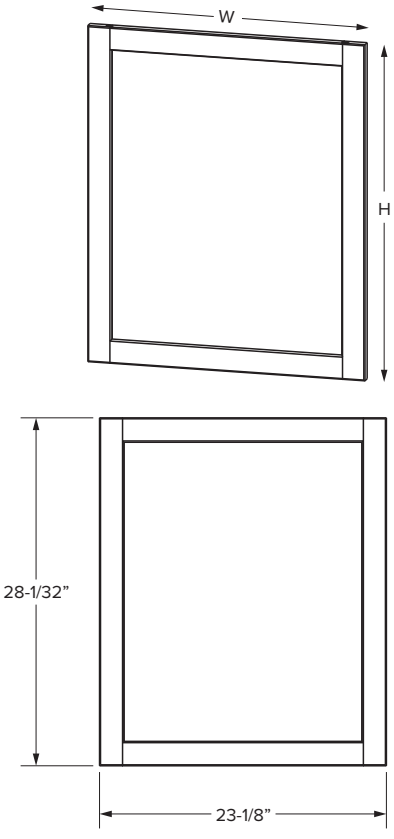

Accessories - Dimensions

Wall end panels

SKU	T	W	H	Grain
WEP1242	1/4”	11-1/4”	42”	vertical
WEP1542	1/4”	14-1/4”	42”	vertical

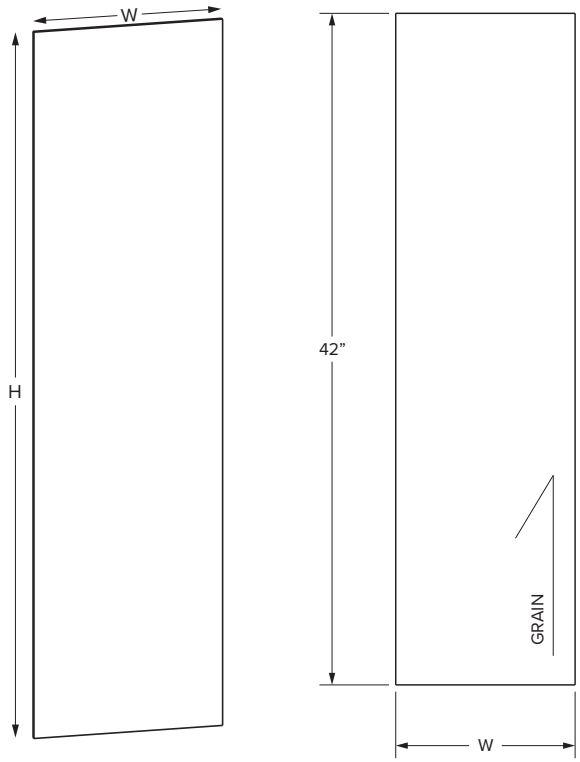

Tall end panel

SKU	T	W	H	Grain
TEP96	1/4”	23-1/4”	96”	vertical

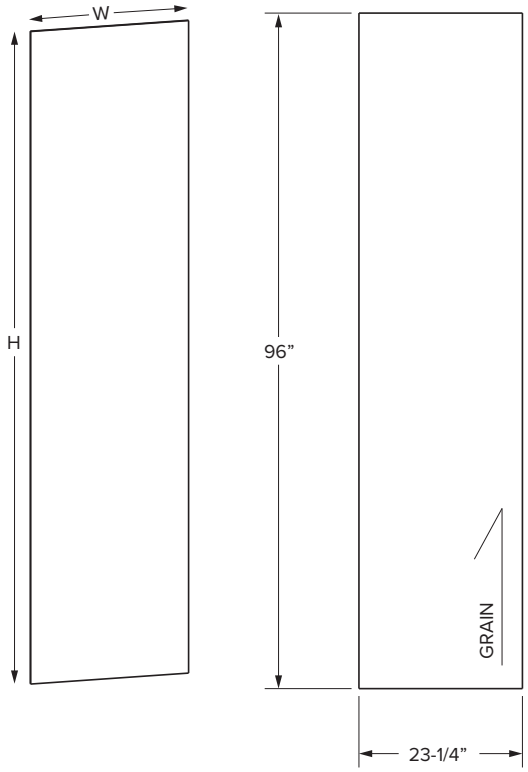

Base end panel

SKU	T	W	H	Grain
BEP24	1/4”	23-1/4”	34-1/2”	vertical

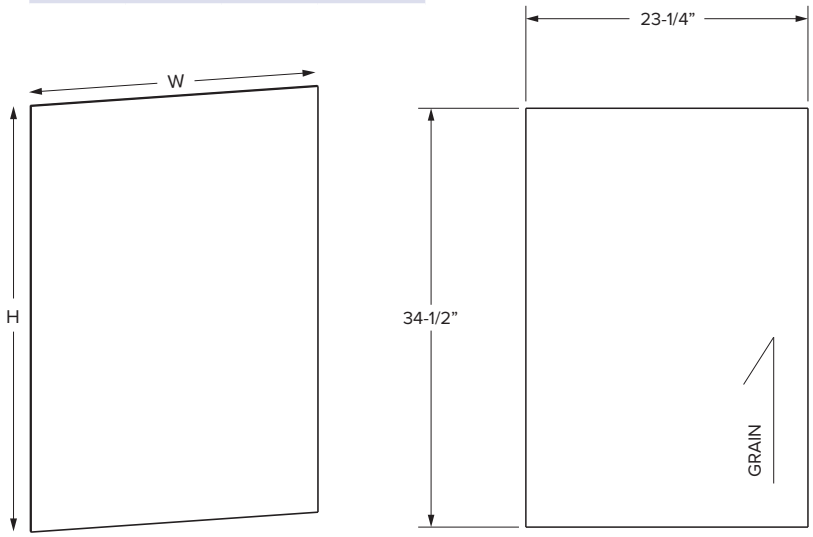

Refrigerator end panels

SKU	W	D	H	Grain
REP24-.75	3/4”	24”	96”	vertical
REP24-1.5	1-1/2”	24”	96”	vertical
REP30-.75	3/4”	30”	96”	vertical
REP30-1.5	1-1/2”	30”	96”	vertical

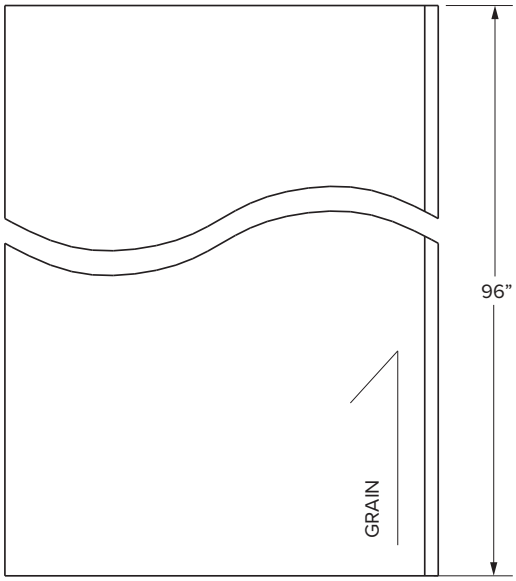

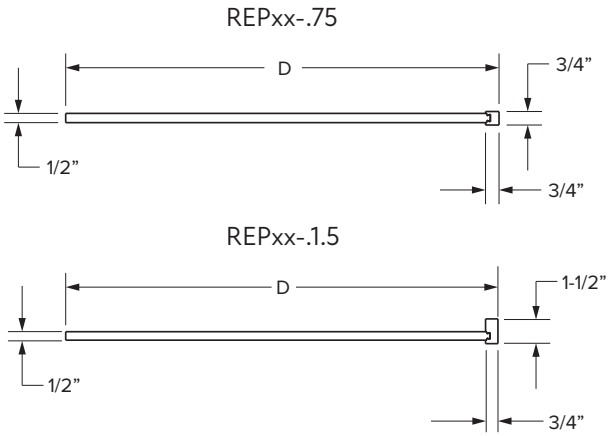

Dishwasher end panels

SKU	W	D	H	Grain
DWEP1.5	1-1/2”	24”	34-1/2”	vertical
DWEP3	3”	24”	34-1/2”	vertical
DWEP6	6”	24”	34-1/2”	vertical

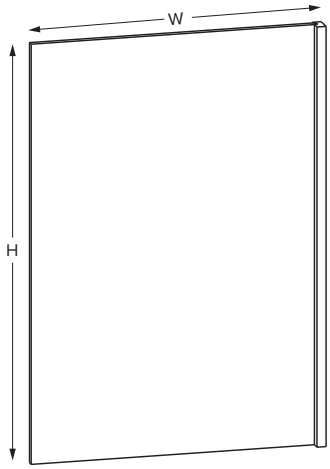

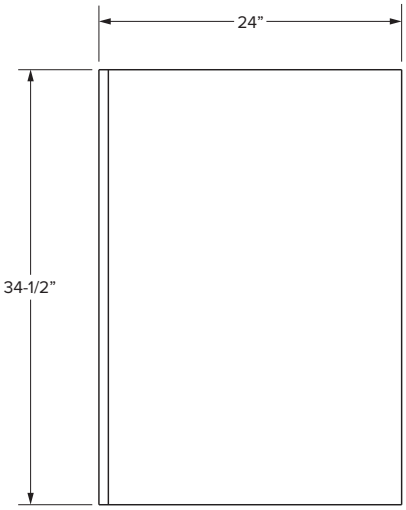

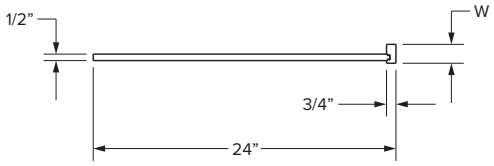

Accessories - Dimensions

Fillers

SKU	W	T	H
F330	3”	3/4”	30”
F342	3”	3/4”	42”
F396	3”	3/4”	96”
F630	6”	3/4”	30”
F642	6”	3/4”	42”
F696	6”	3/4”	96”

Fillers can be cut to length

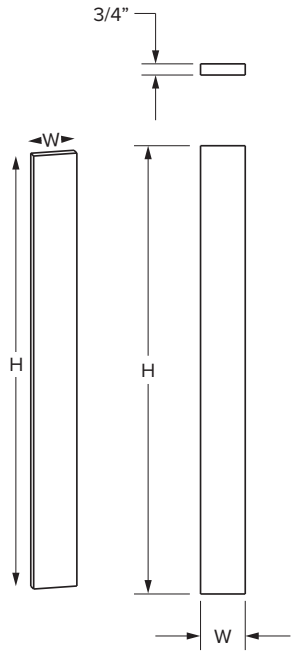

Fillers – fluted

SKU	W	T	H
FF330	3”	3/4”	30”
FF336	3”	3/4”	36”
FF342	3”	3/4”	42”
FF396	3”	3/4”	96”

Fillers can be cut to length

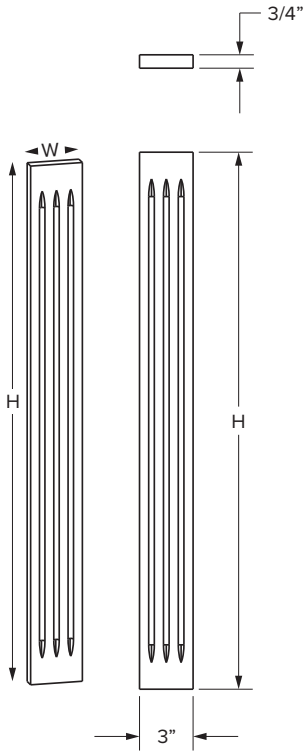

Fillers – overlay

SKU	W	T	H
FO330	2-1/2”	3/4”	29-1/2”
FO336	2-1/2”	3/4”	35-1/2”
FO342	2-1/2”	3/4”	41-1/2”
FO396	2-1/2”	3/4”	95-1/2”
FO630	5-1/2”	3/4”	29-1/2”
FO636	5-1/2”	3/4”	35-1/2”
FO642	5-1/2”	3/4”	41-1/2”

Fillers can be cut to length

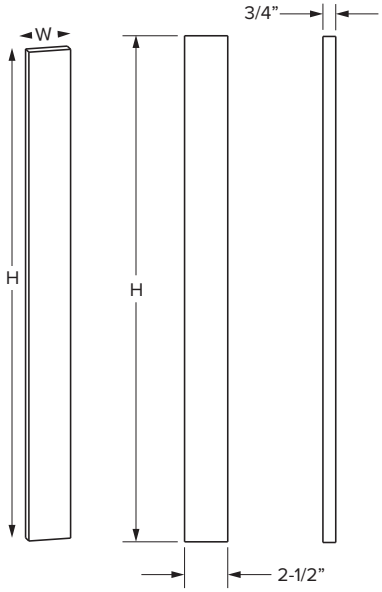

FO3XX

Base Fillers

SKU	T	W	H
BF3	3/4”	3”	34-1/2”
BF6	3/4”	6”	34-1/2”

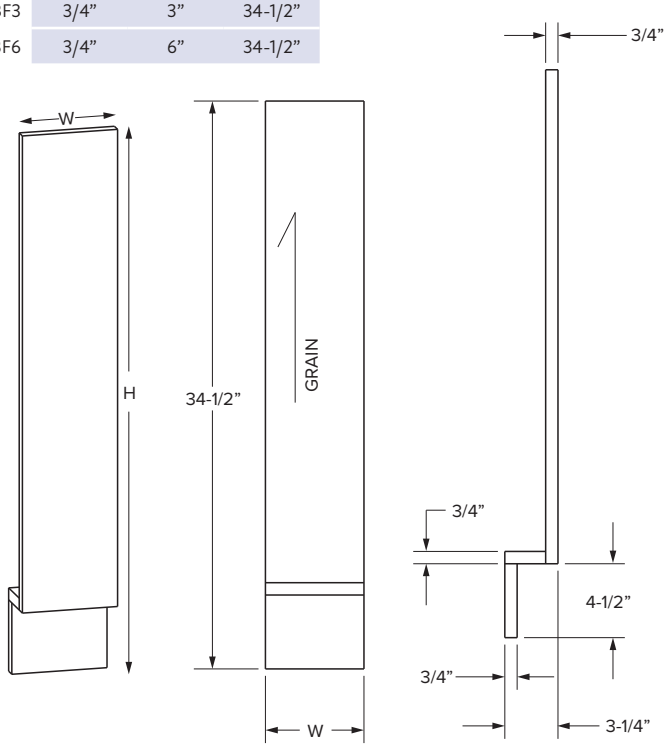

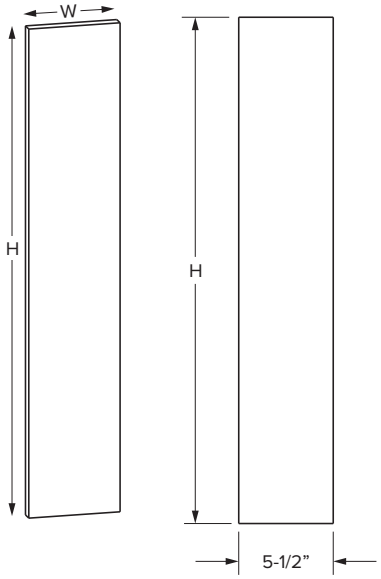

FO6XX

Mouldings

SKU	Description	H	W	L
BM8	Batten	3/4”	1/4”	96”
SCM8	Scribe	3/4”	1/4”	96”
SHM8	Shoe	3/4”	1/2”	96”
LRB8	Light Rail	13/16”	1-3/8”	96”
LRD8	Light Rail	1-1/2”	1”	96”
LRS8	Light Rail	3/4”	1-1/4”	96”

SKU	Description	H	W	L
ICM8	Inside Corner	3/4”	3/4”	96”
OCM8	Outside Corner	13/16”	13/16”	96”
OCM8-135	Outside Corner	1/4”	11/16”	96”
QR8	Quarter Round	3/4”	3/4”	96”
DM8	Dentil	11/16”	5/16	96”
RM8	Rope	3/4”	3/8”	96”

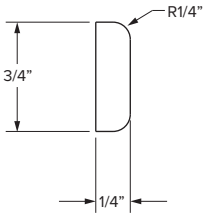

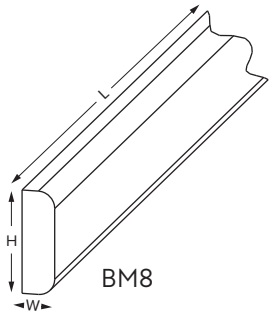

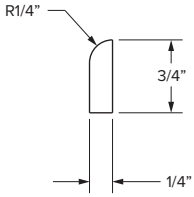

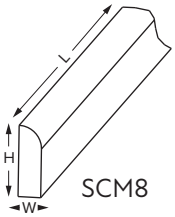

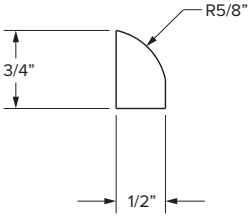

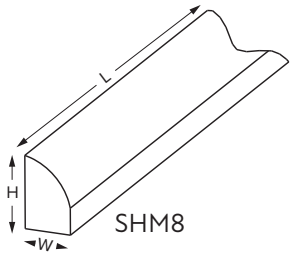

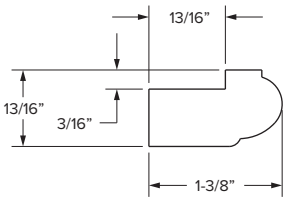

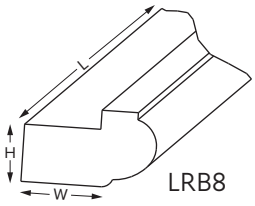

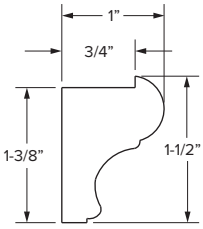

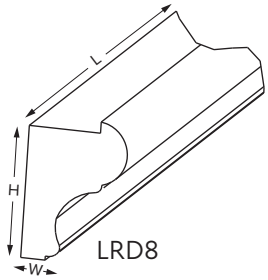

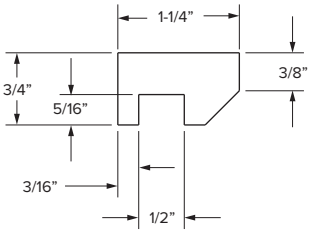

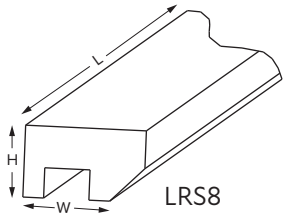

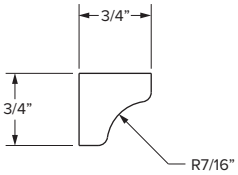

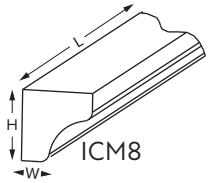

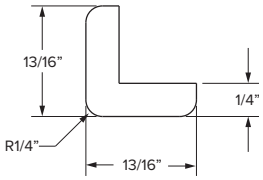

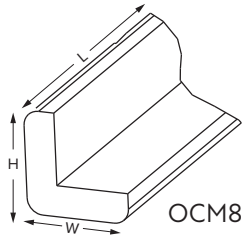

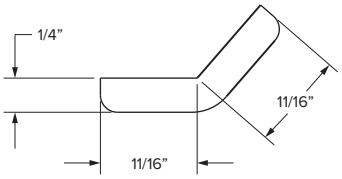

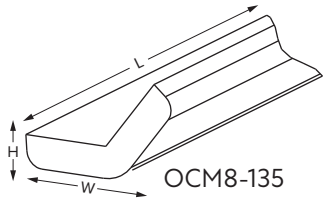

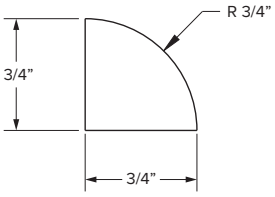

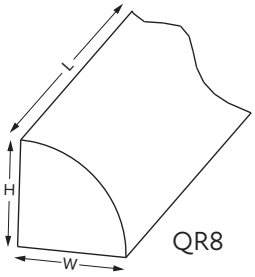

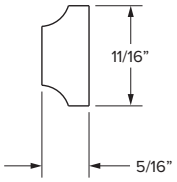

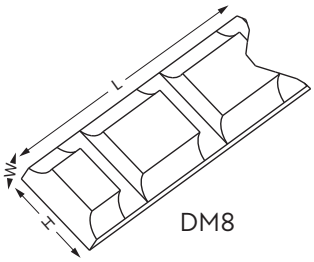

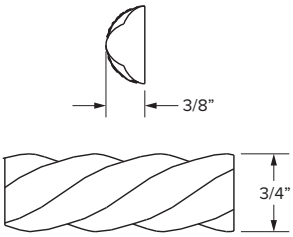

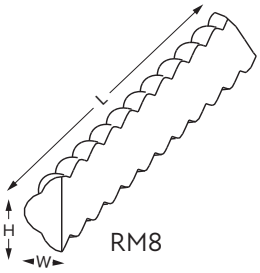

Mouldings

SKU	Description	T	H	L
FB8	Furniture Base	3/4”	4-5/8”	96”
TKC8	Toe Kick	1/4”	4-1/2”	96”
CMA8	Crown	11/16”	3-13/16”	96”
CMC8	Crown	3/4”	3-7/16”	96”
CM8	Crown	3/4”	2-1/2”	96”
CMV8	Cove	1/2”	2-11/16”	96”

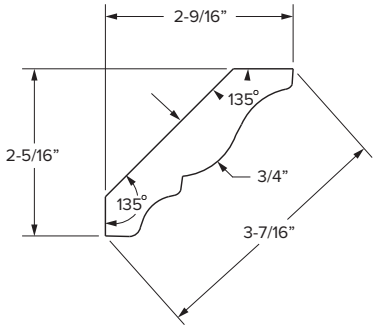

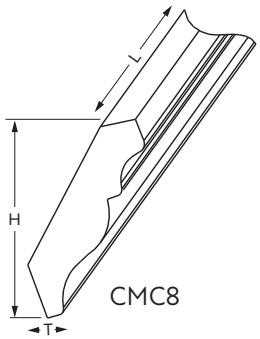

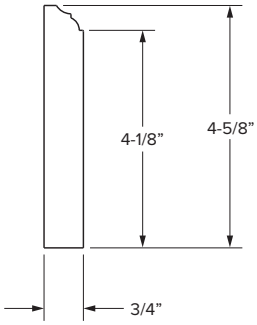

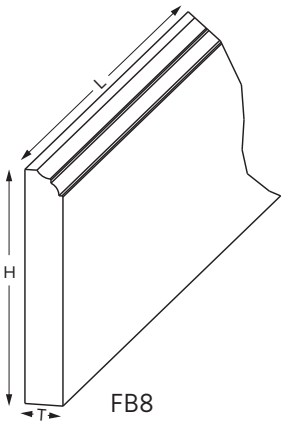

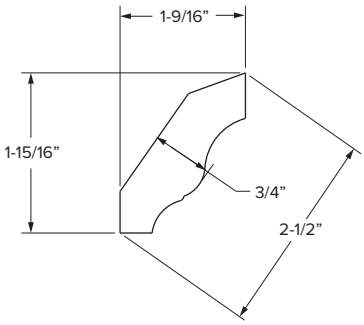

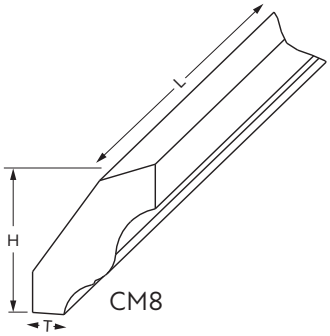

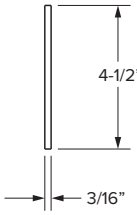

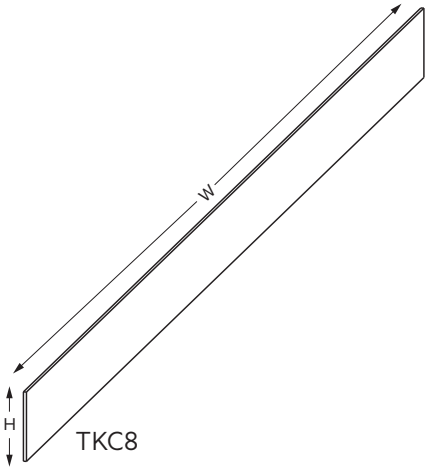

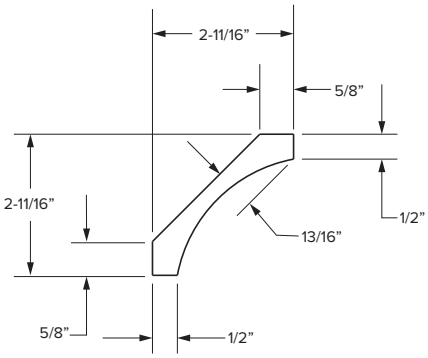

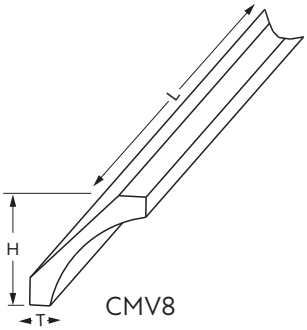

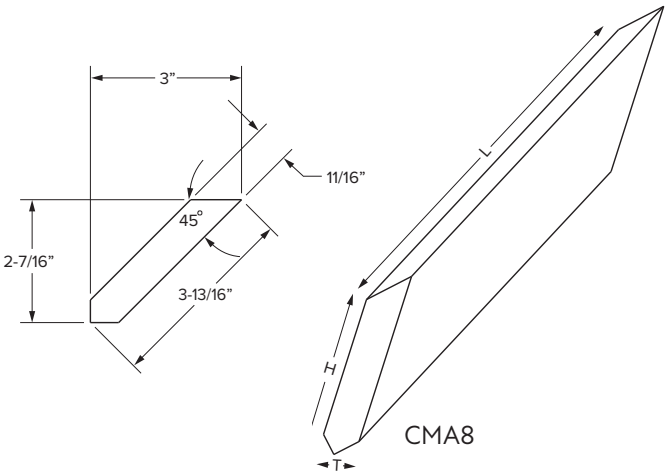

Moulding - Installation Guides

CONTEMPORARY A

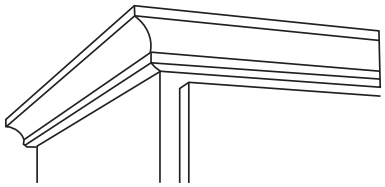

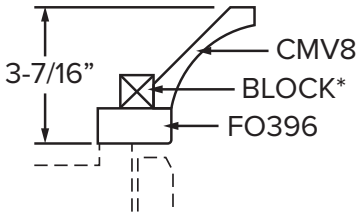

Moulding to be cut, assembled and installed at job site.

**Provided by customer*

CONTEMPORARY B

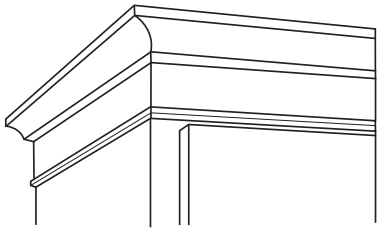

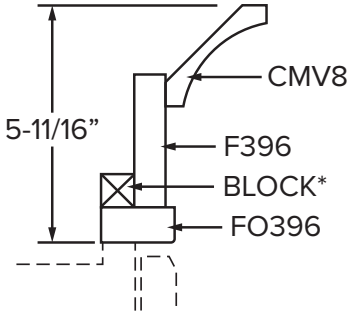

Moulding to be cut, assembled and installed at job site.

**Provided by customer*

CONTEMPORARY C

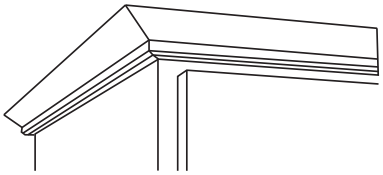

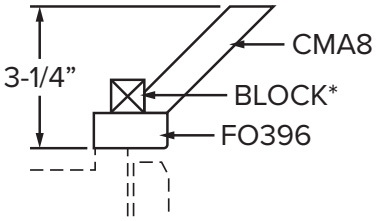

Moulding to be cut, assembled and installed at job site.

**Provided by customer*

TRANSITIONAL

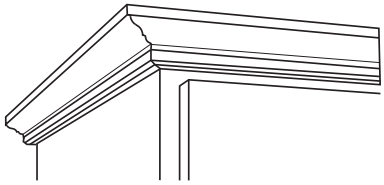

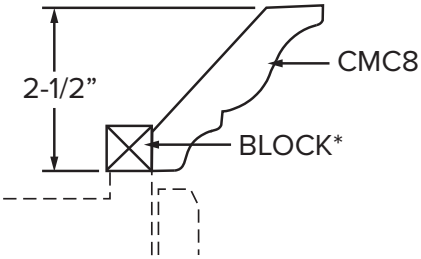

Moulding to be cut, assembled and installed at job site.

**Provided by customer*

Legs

SKU	W	D	H
DECOLEG	3-1/2”	3-1/2”	34-1/2”
SDECOLEG	3-1/2”	1-5/8”	34-1/2”

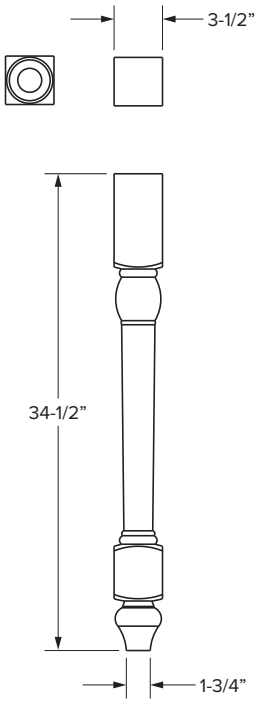

DECOLEG

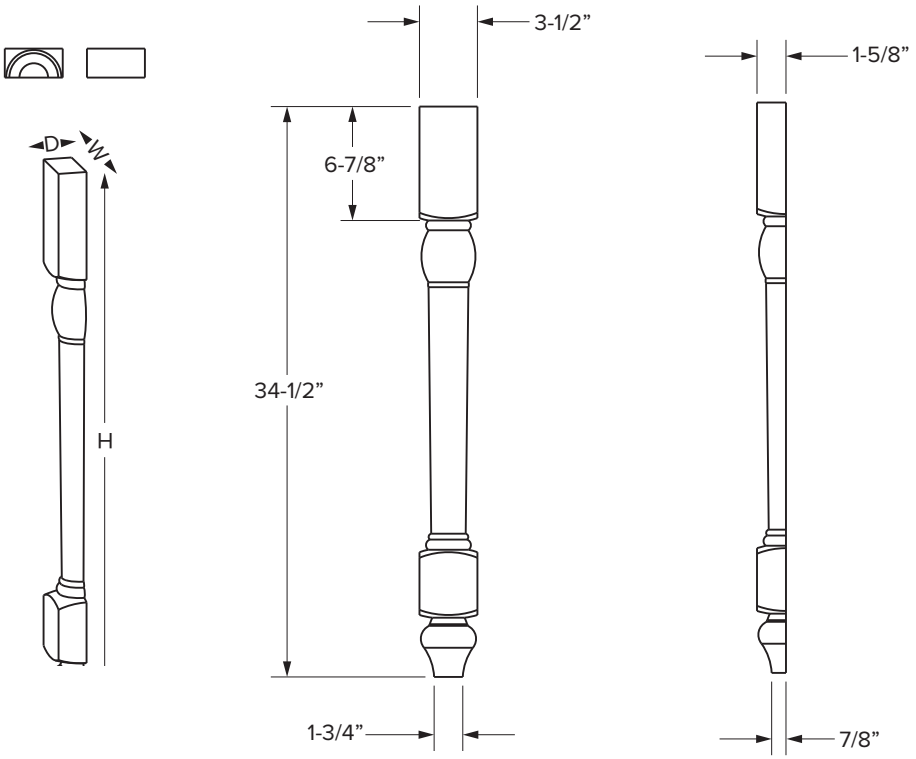

SDECOLEG

Bun feet

SKU	W	D	H
BUNFOOT	3-3/8”	3-1/4”	4-1/2”
HBUNFOOT	3-3/8”	1-11/16”	4-1/2”
TFOOT	3-1/4”	3-1/4”	4-1/2”
HTFOOT	3-1/4”	1-5/8”	4-1/2”

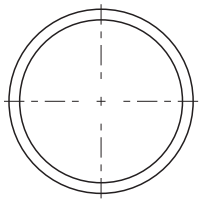

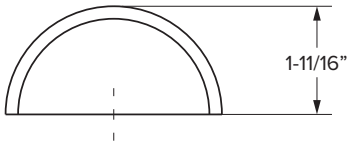

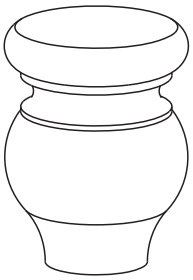

BUNFOOT

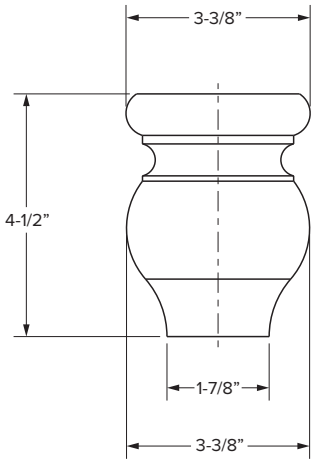

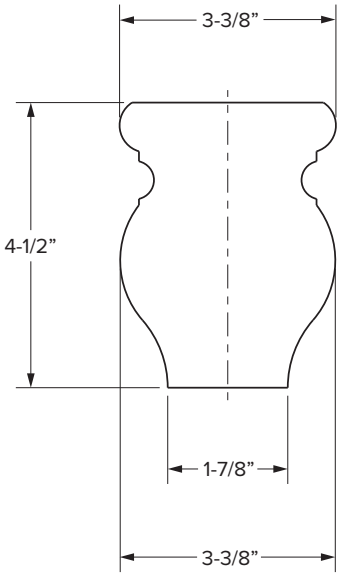

HBUNFOOT

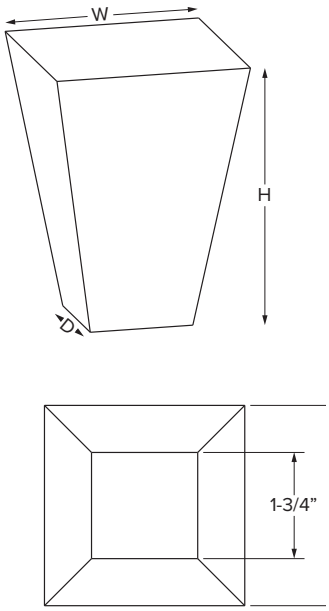

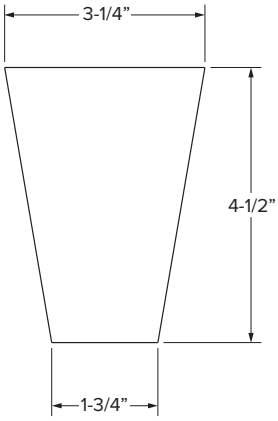

TFOOT

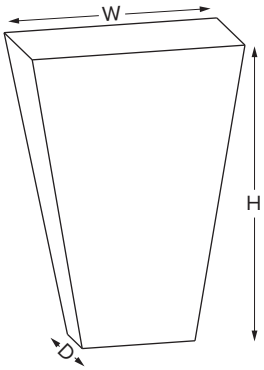

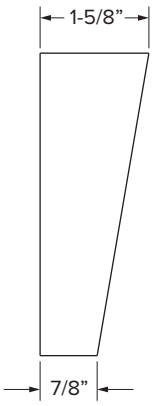

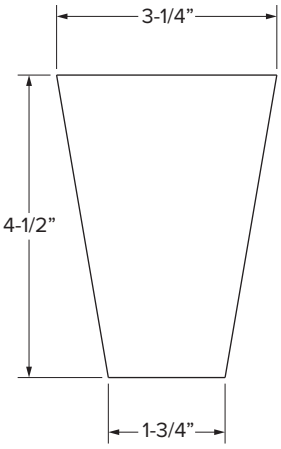

HTFOOT

Corbels

SKU	W	D	H
CORBEL-B	4-11/16”	4-11/16”	9-5/8”
CORBEL-LS	3-1/2”	7-3/16”	12”
CORBEL-S	3-3/4”	3-3/4”	6-7/8”

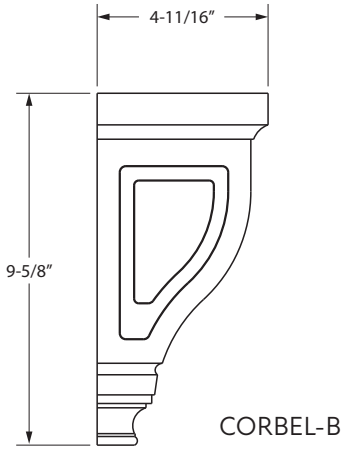

CORBEL-B

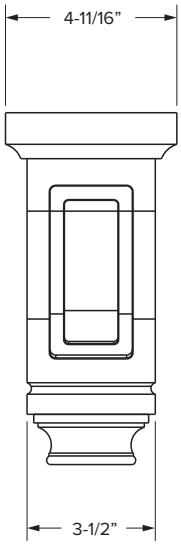

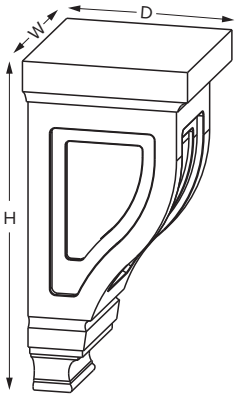

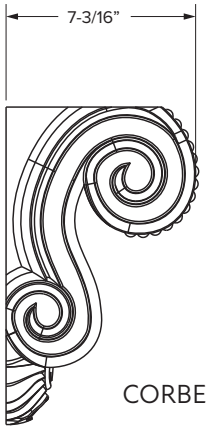

CORBEL-LS

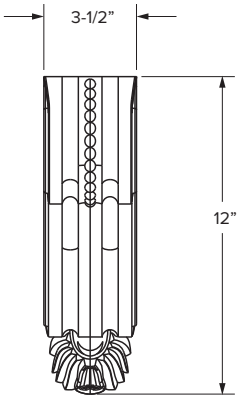

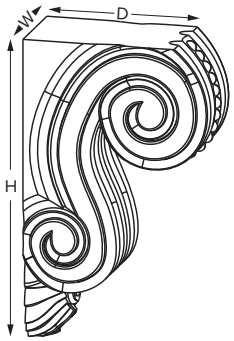

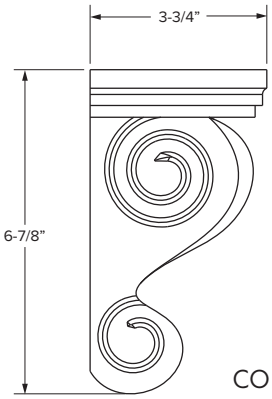

CORBEL-S

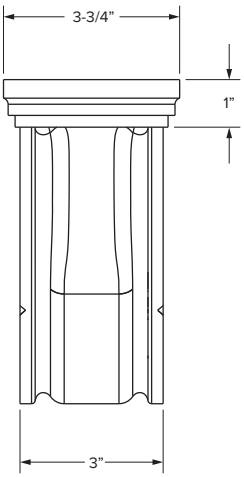

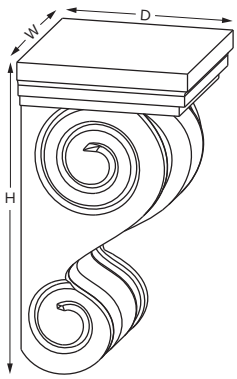

Organizers – rollout trays

SKU	W	D	H
ROT15	11”	21”	3-1/4”
ROT18	14”	21”	3-1/4”
ROT21	17”	21”	3-1/4”
ROT24	19-1/2”	21”	3-1/4”
ROT27	22-1/2”	21”	3-1/4”
ROT30	25-1/2”	21”	3-1/4”
ROT33	28-1/2”	21”	3-1/4”
ROT36	31-1/2”	21”	3-1/4”

NOTE: Drawer slides included.
MID include soft-close slides.
ECO include self-close slides.

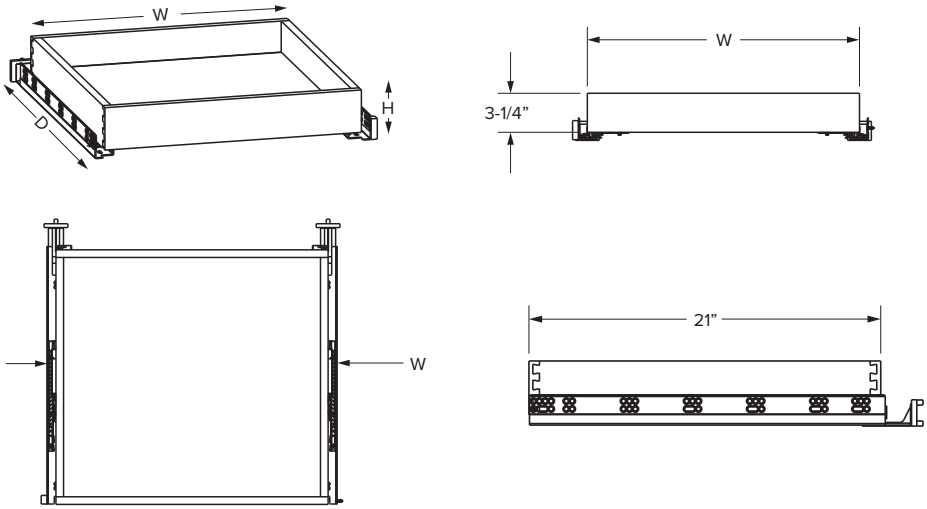

Organizers – lazy susans

SKU	Description	A	B	C	D	E
RTA-MLS28	Polished Chrome	2-1/16”	16-1/16”	3-13/32”	17-13/32”	11-15/16”
RTA-PLS28	White Plastic	2-1/16”	16-1/16”	3-13/32”	17-13/32”	11-15/16”
RTA-WLS28	UV Coated Wood	2-1/16”	16-1/16”	3-13/32”	17-13/32”	11-15/16”

NOTE: Fits in BC33U & BC36U

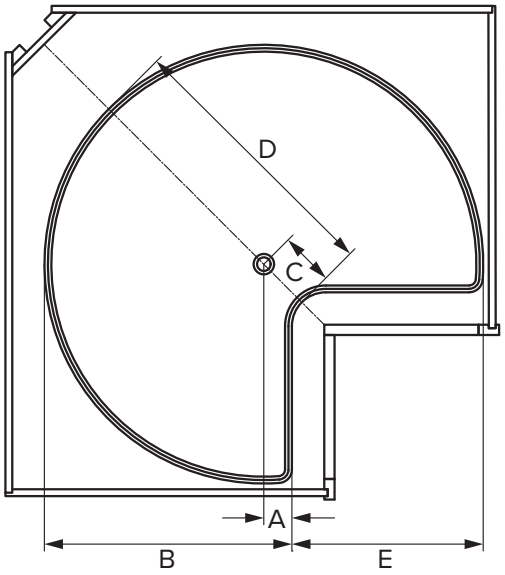

Vanity Trim Kit

SKU	H	W	L
VTRIMKIT-ESP	3/4”	1/4”	4-1/2”
VTRIMKIT-SD	3/4”	1/4”	4-1/2”
VTRIMKIT-SL	3/4”	1/4”	4-1/2”
VTRIMKIT-PGRY	3/4”	1/4”	4-1/2”
VTRIMKIT-PWH	3/4”	1/4”	4-1/2”
VTRIMKIT-SW	3/4”	1/4”	4-1/2”

NOTE: Each kit includes 10 packs
(2 pieces per pack)

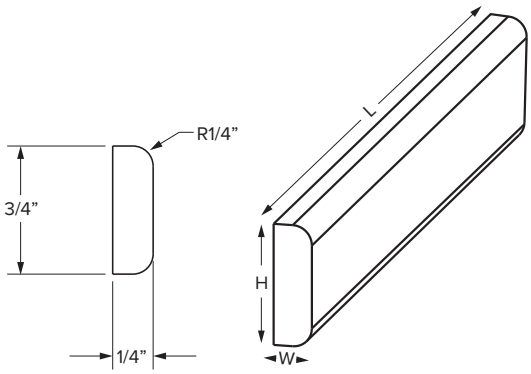

Notes:
- On **Assembled** single door cabinets, hinged left (L) or hinged right (R) designation is required. Please add to the part number before the finish code.

	ASSEMBLED					QUICKBUILD®					
	SKU	**CATALINA** Standard Finishes	**CATALINA** Accent Finishes	**MAUI** All Finishes	**HATTERAS** All Finishes	SKU	**CATALINA** Standard Finishes	**CATALINA** Accent Finishes	**CATALINA** Unfinished	**MAUI** All Finishes	**HATTERAS** All Finishes
WALL CABINETS - 12" HIGH - 12" DEEP											
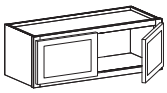 • Two butt doors • 39" wide has center stile • No shelves included • Available widths: 30"-39"	XW3012	379	—	379	332	W3012	317	—	317	317	270
	XW3312	398	—	398	349	W3312	336	—	336	336	287
	XW3612	416	—	416	367	W3612	354	—	354	354	305
	XW3912	433	—	433	388	W3912	371	—	371	371	326
WALL CABINETS - 15" HIGH - 12" DEEP											
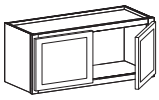 • Two butt doors • 39" wide has center stile • No shelves included • Available widths: 30"-39"	XW3015	403	—	403	346	W3015	341	—	341	341	284
	XW3315	426	—	426	365	W3315	364	—	364	364	303
	XW3615	454	—	454	397	W3615	392	—	392	392	335
	XW3915	474	—	474	424	W3915	412	—	412	412	362
WALL CABINETS - 18" HIGH - 12" DEEP											
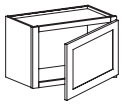 • Single door • No shelves included • Available width: 21"	XW2118L/R	338	—	338	301	W2118	276	—	276	276	239
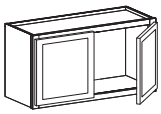 • Two butt doors • 39" wide has center stile • No shelves included • Available widths: 24"-39"	XW2418	380	—	380	332	W2418	318	—	318	318	270
	XW3018	420	—	420	367	W3018	358	—	358	358	305
	XW3318	465	—	465	406	W3318	403	—	403	403	344
	XW3618	483	—	483	432	W3618	421	—	421	421	370
	XW3918	500	—	500	460	W3918	438	—	438	438	398
WALL CABINETS - 24" HIGH - 12" DEEP											
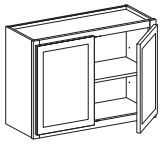 • Two butt doors • 39" wide has center stile • One adjustable shelf included • Available widths: 30"-39"	XW3024	521	—	521	467	W3024	459	—	459	459	405
	XW3324	558	—	558	500	W3324	496	—	496	496	438
	XW3624	594	—	594	535	W3624	532	—	532	532	473
	XW3924	639	—	639	572	W3924	577	—	577	577	512

Notes:
- On **Assembled** single door cabinets, hinged left (L) or hinged right (R) designation is required. Please add to the part number before the finish code.

	ASSEMBLED					QUICKBUILD®					
	SKU	**CATALINA** Standard Finishes	**CATALINA** Accent Finishes	**MAUI** All Finishes	**HATTERAS** All Finishes	SKU	**CATALINA** Standard Finishes	**CATALINA** Accent Finishes	**CATALINA** Unfinished	**MAUI** All Finishes	**HATTERAS** All Finishes
WALL CABINETS - 18" OR 24" HIGH - 12" DEEP											
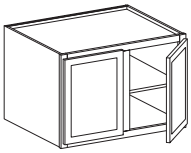 • Two butt doors • 39" wide has center stile • 18" high - no shelves included • 24" high - one adjustable shelf included • Available widths: 36" or 39"	XW361824	566	—	566	505	W361824	504	—	504	504	443
	XW391824	663	—	663	574	W391824	601	—	601	601	512
	XW362424	634	—	634	559	W362424	572	—	572	572	497
	XW392424	717	—	717	627	W392424	655	—	655	655	565
WALL CABINETS - 30" HIGH - 12" DEEP											
• Single door • Two adjustable shelves included • Available widths: 9"-21"	XW0930L/R	333	—	333	297	W0930	271	—	271	271	235
	XW1230L/R	362	—	362	322	W1230	300	—	300	300	260
	XW1530L/R	394	—	394	352	W1530	332	—	332	332	290
	XW1830L/R	428	—	428	384	W1830	366	—	366	366	322
	XW2130L/R	484	—	484	429	W2130	422	—	422	422	367
• Two butt doors • 39" and 42" wide have center stile • Two adjustable shelves included • Available widths: 24"-42"	XW2430	549	—	549	483	W2430	487	—	487	487	421
	XW2730	586	—	586	529	W2730	524	—	524	524	467
	XW3030	618	—	618	551	W3030	556	—	556	556	489
	XW3330	652	—	652	574	W3330	590	—	590	590	512
	XW3630	693	—	693	607	W3630	631	—	631	631	545
	XW3930	734	—	734	641	W3930	672	—	672	672	579
	XW4230	780	—	780	687	W4230	718	—	718	718	625

Notes:
- On **Assembled** single door cabinets, hinged left (L) or hinged right (R) designation is required. Please add to the part number before the finish code.

	ASSEMBLED					QUICKBUILD®					
	SKU	**CATALINA** Standard Finishes	**CATALINA** Accent Finishes	**MAUI** All Finishes	**HATTERAS** All Finishes	SKU	**CATALINA** Standard Finishes	**CATALINA** Accent Finishes	**CATALINA** Unfinished	**MAUI** All Finishes	**HATTERAS** All Finishes
WALL CABINETS - 36" HIGH - 12" DEEP											
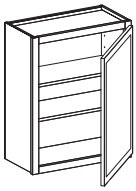 • Single door • Two adjustable shelves included • Available widths: 9"-21"	XW0936L/R	356	—	356	315	W0936	294	—	294	294	253
	XW1236L/R	392	—	392	344	W1236	330	—	330	330	282
	XW1536L/R	433	—	433	375	W1536	371	—	371	371	313
	XW1836L/R	478	—	478	412	W1836	416	—	416	416	350
	XW2136L/R	532	—	532	460	W2136	470	—	470	470	398
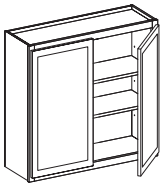 • Two butt doors • 39" and 42" wide have center stile • Two adjustable shelves included • Available widths: 24"-42"	XW2436	583	—	583	512	W2436	521	—	521	521	450
	XW2736	625	—	625	572	W2736	563	—	563	563	510
	XW3036	671	—	671	610	W3036	609	—	609	609	548
	XW3336	719	—	719	650	W3336	657	—	657	657	588
	XW3636	760	—	760	680	W3636	698	—	698	698	618
	XW3936	800	—	800	715	W3936	738	—	738	738	653
	XW4236	845	—	845	752	W4236	783	—	783	783	690
WALL CABINETS - 42" HIGH - 12" DEEP											
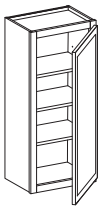 • Single door • Three adjustable shelves included • Available widths: 9"-21"	XW0942L/R	401	—	401	365	W0942	339	—	339	339	303
	XW1242L/R	443	—	443	400	W1242	381	—	381	381	338
	XW1542L/R	491	—	491	447	W1542	429	—	429	429	385
	XW1842L/R	547	—	547	503	W1842	485	—	485	485	441
	XW2142L/R	608	—	608	555	W2142	546	—	546	546	493
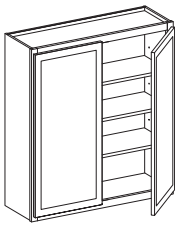 • Two butt doors • 39" and 42" wide have center stile • Three adjustable shelves included • Available widths: 24"-42"	XW2442	679	—	679	609	W2442	617	—	617	617	547
	XW2742	729	—	729	652	W2742	667	—	667	667	590
	XW3042	779	—	779	696	W3042	717	—	717	717	634
	XW3342	825	—	825	727	W3342	763	—	763	763	665
	XW3642	870	—	870	760	W3642	808	—	808	808	698
	XW3942	913	—	913	793	W3942	851	—	851	851	731
	XW4242	960	—	960	823	W4242	898	—	898	898	761

Notes:
- On **Assembled** single door cabinets, hinged left (L) or hinged right (R) designation is required. Please add to the part number before the finish code.

	ASSEMBLED					QUICKBUILD®					
	SKU	**CATALINA** Standard Finishes	**CATALINA** Accent Finishes	**MAUI** All Finishes	**HATTERAS** All Finishes	SKU	**CATALINA** Standard Finishes	**CATALINA** Accent Finishes	**CATALINA** Unfinished	**MAUI** All Finishes	**HATTERAS** All Finishes
WALL CABINETS - DIAGONAL CORNER - 12" OR 15" DEEP											
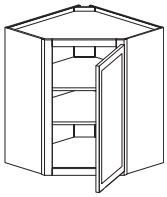 • Single door • 30" and 36" high - two adjustable shelves included • 42" high - three adjustable shelves included • Available widths: 24" and 27"	XWDC2430L/R	743	—	743	637	WDC2430	681	—	681	681	575
	XWDC2436L/R	850	—	850	746	WDC2436	788	—	788	788	684
	XWDC2442L/R	983	—	983	843	WDC2442	921	—	921	921	781
	XWDC273615L/R	880	—	880	771	WDC273615	818	—	—	818	709
	XWDC274215L/R	1043	—	1043	910	WDC274215	981	—	—	981	848
WALL CABINETS - BLIND CORNER - 12" DEEP											
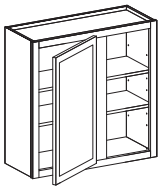 • Single door • 30" and 36" high - two adjustable shelves included • 42" high - three adjustable shelves included • Available widths: 30"-33"	XWBC30-30L/R	643	—	643	571	WBC30-3330U	581	—	581	581	509
	XWBC30-36L/R	718	—	718	629	WBC30-3336U	656	—	656	656	567
	XWBC30-42L/R	803	—	803	711	WBC30-3342U	741	—	741	741	649
WALL CABINETS - END - 12" DEEP											
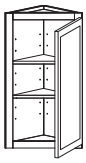 • Single door • 30" and 36" high - two adjustable shelves included • 42" high - three adjustable shelves included • Available width: 17-1/6"	XWEC1230L/R	347	—	347	313	WEC1230	285	—	—	285	251
	XWEC1236L/R	383	—	383	344	WEC1236	321	—	—	321	282
	XWEC1242L/R	427	—	427	383	WEC1242	365	—	—	365	321
WALL CABINETS WITH GLASS DOOR - 30" HIGH - 12" DEEP											
• Single door • Two adjustable shelves included • Available widths: 15" and 18"	XW1530MIL/R	415	—	415	—	W1530MI	353	—	—	353	—
	XW1830MIL/R	458	—	458	—	W1830MI	396	—	—	396	—
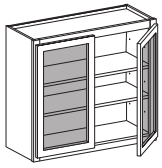 • Two butt doors • Two adjustable shelves included • Available widths: 30" and 36"	XW3030MI	653	—	653	—	W3030MI	591	—	—	591	—
	XW3630MI	738	—	738	—	W3630MI	676	—	—	676	—

Notes:
- On **Assembled** single door cabinets, hinged left (L) or hinged right (R) designation is required. Please add to the part number before the finish code.

	ASSEMBLED					QUICKBUILD®					
	SKU	**CATALINA** Standard Finishes	**CATALINA** Accent Finishes	**MAUI** All Finishes	**HATTERAS** All Finishes	SKU	**CATALINA** Standard Finishes	**CATALINA** Accent Finishes	**CATALINA** Unfinished	**MAUI** All Finishes	**HATTERAS** All Finishes
WALL CABINETS WITH GLASS DOOR - 36" HIGH - 12" DEEP											
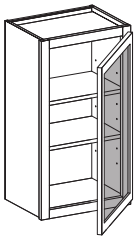 • Single door • Two adjustable shelves included • Available widths: 15" and 18"	XW1536MIL/R	464	—	464	—	W1536MI	402	—	—	402	—
	XW1836MIL/R	509	—	509	—	W1836MI	447	—	—	447	—
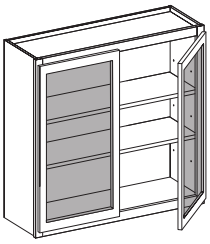 • Two butt doors • Two adjustable shelves included • Available widths: 30" and 36"	XW3036MI	726	—	726	—	W3036MI	664	—	—	664	—
	XW3636MI	824	—	824	—	W3636MI	762	—	—	762	—
WALL CABINETS WITH GLASS DOOR - 42" HIGH - 12" DEEP											
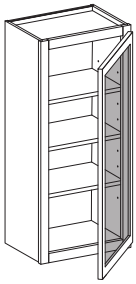 • Single door • Three adjustable shelves included • Available widths: 15" and 18"	XW1542MIL/R	521	—	521	—	W1542MI	459	—	—	459	—
	XW1842MIL/R	591	—	591	—	W1842MI	529	—	—	529	—
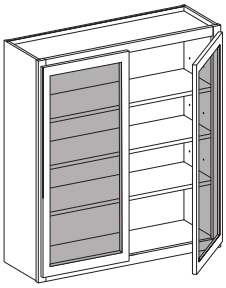 • Two butt doors • Three adjustable shelves included • Available widths: 30" and 36"	XW3042MI	815	—	815	—	W3042MI	753	—	—	753	—
	XW3642MI	931	—	931	—	W3642MI	869	—	—	869	—
WALL DIAGONAL CORNER WITH GLASS DOOR - 12" OR 15" DEEP											
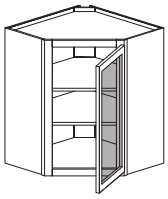 • Single door • 30" and 36" high - two adjustable shelves included • 42" high - three adjustable shelves included • Available widths: 24" and 27"	XWDC2430MIL/R	848	—	848	—	WDC2430MI	786	—	—	786	—
	XWDC2436MIL/R	945	—	945	—	WDC2436MI	883	—	—	883	—
	XWDC2442MIL/R	1116	—	1116	—	WDC2442MI	1054	—	—	1054	—
	XWDC2736MIL/R	993	—	993	—	WDC273615MI	931	—	—	931	—
	XWDC2742MIL/R	1170	—	1170	—	WDC274215MI	1108	—	—	1108	—

Notes:
- Single door base cabinets will come assembled hinged left.

	ASSEMBLED					QUICKBUILD®					
	SKU	CATALINA Standard Finishes	CATALINA Accent Finishes	MAUI All Finishes	HATTERAS All Finishes	SKU	CATALINA Standard Finishes	CATALINA Accent Finishes	CATALINA Unfinished	MAUI All Finishes	HATTERAS All Finishes
BASE CABINETS - FULL HEIGHT DOOR - 34-1/2" HIGH - 24" DEEP											
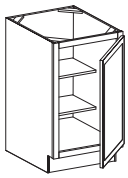 • One full height door • Two adjustable half-depth shelves included • 9" wide does not have shelf • Available widths: 9"-18"	XBFH09	470	494	470	413	BFH09	408	428	408	408	351
	XBFH12	504	529	504	442	BFH12	442	464	442	442	380
	XBFH15	542	569	542	475	BFH15	480	504	480	480	413
	XBFH18	585	614	585	511	BFH18	523	549	523	523	449
BASE CABINETS - DRAWER/DOOR - 34-1/2" HIGH - 24" DEEP											
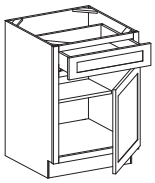 • Single door • One drawer • One adjustable half-depth shelf included • Available widths: 12"-21"	XB12	569	597	569	506	B12	507	532	507	507	444
	XB15	614	645	614	539	B15	552	580	552	552	477
	XB18	662	695	662	581	B18	600	630	600	600	519
	XB21	714	750	714	623	B21	652	685	652	652	561
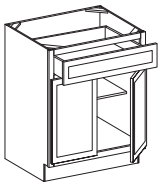 • Two butt doors • One drawer • One adjustable half-depth shelf included • 39" and 42" wide have center stile • Available widths: 24"-42"	XB24	780	819	780	671	B24	718	754	718	718	609
	XB27	838	880	838	730	B27	776	815	776	776	668
	XB30	906	951	906	790	B30	844	886	844	844	728
	XB33	977	1026	977	829	B33	915	961	915	915	767
	XB36	1028	1079	1028	881	B36	966	1014	966	966	819
	XB39	1075	—	1075	924	B39	1013	—	1013	1013	862
	XB42	1127	—	1127	984	B42	1065	—	1065	1065	922
BASE CABINETS - 2 DRAWER - 34-1/2" HIGH - 24" DEEP											
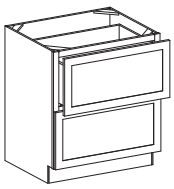 • Two drawers • Available widths: 30" and 36"	XDB30-2	1113	—	1113	963	DB30-2	1051	—	1051	1051	901
	XDB36-2	1236	—	1236	1068	DB36-2	1174	—	1174	1174	1006

Notes:
- Single door base cabinets will come assembled hinged left.

	ASSEMBLED					QUICKBUILD®					
	SKU	CATALINA Standard Finishes	CATALINA Accent Finishes	MAUI All Finishes	HATTERAS All Finishes	SKU	CATALINA Standard Finishes	CATALINA Accent Finishes	CATALINA Unfinished	MAUI All Finishes	HATTERAS All Finishes
BASE CABINETS - 3 DRAWER - 34-1/2" HIGH - 24" DEEP											
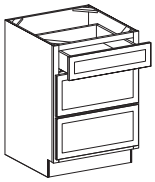 • Three drawers • Available widths: 12"-36"	XDB12-3	841	—	841	727	DB12-3	779	—	779	779	665
	XDB15-3	912	958	912	786	DB15-3	850	893	850	850	724
	XDB18-3	985	1034	985	851	DB18-3	923	969	923	923	789
	XDB21-3	1054	1107	1054	919	DB21-3	992	1042	992	992	857
	XDB24-3	1118	1174	1118	979	DB24-3	1056	1109	1056	1056	917
	XDB30-3	1197	1257	1197	1048	DB30-3	1135	1192	1135	1135	986
	XDB36-3	1423	1494	1423	1222	DB36-3	1361	1429	1361	1361	1160
SINK BASE - 34-1/2" HIGH - 24" DEEP											
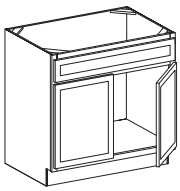 • Two butt doors • One false drawer front • 39" wide has center stile • Available widths: 30"-39"	XSB30	712	—	712	624	SB30	650	—	650	650	562
	XSB33	748	—	748	661	SB33	686	—	686	686	599
	XSB36	798	838	798	711	SB36	736	773	736	736	649
	XSB39	839	—	839	737	SB39	777	—	777	777	675
FARM SINK BASE - 34-1/2" HIGH - 24" DEEP											
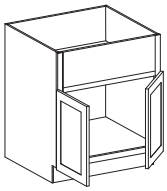 • Two butt doors • No center stile • Available widths: 36" and 39"	XSBF36	833	—	833	721	SBF36	771	—	771	771	659
	XSBF39	882	—	882	761	SBF39	820	—	820	820	699
SINK FRONT CORNER DIAGONAL											
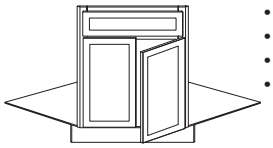 • Two butt doors • One false drawer front • Floor included • Available width: 42"	XSFCD42	420	—	420	371	SFCD42	420	—	420	420	371

Notes:
- Single door base cabinets will come assembled hinged left.

	ASSEMBLED					QUICKBUILD®					
	SKU	**CATALINA** Standard Finishes	**CATALINA** Accent Finishes	**MAUI** All Finishes	**HATTERAS** All Finishes	SKU	**CATALINA** Standard Finishes	**CATALINA** Accent Finishes	**CATALINA** Unfinished	**MAUI** All Finishes	**HATTERAS** All Finishes
BASE CORNER - 34-1/2" HIGH - 24" DEEP											
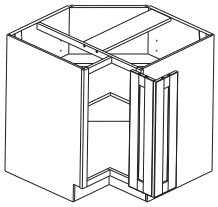 • Bifold doors • Assembled - Lazy Susan inserts installed in cabinet MLS = Polished Chrome Lazy Susan PLS = Plastic Lazy Susan WLS = UV Coated Wood Lazy Susan • QuickBuild - Lazy Susan inserts available • Available widths: 33" and 36" * Organizer unit installed in cabinet **Note:** This cabinet is transitioning to an updated rear support design. See Cabinet Dimensions section for more information.	XBC33U	1014	—	1014	891	BC33U	952	—	952	952	829
	XBC33-MLS28*	1385	—	1385	1260		—	—	—	—	—
	XBC33-PLS28*	1359	—	1359	1234		—	—	—	—	—
	XBC33-WLS28*	1629	—	1629	1504		—	—	—	—	—
	XBC36U	1101	—	1101	951	BC36U	1039	—	1039	1039	889
	XBC36-MLS28*	1474	—	1474	1321		—	—	—	—	—
	XBC36-PLS28*	1448	—	1448	1295		—	—	—	—	—
	XBC36-WLS28*	1719	—	1719	1566		—	—	—	—	—
BASE BLIND CORNER - 34-1/2" HIGH - 24" DEEP											
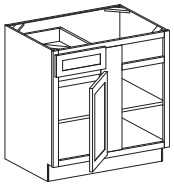 • Single door • One drawer • One adjustable half-depth shelf included • Available widths: 39"-42", 42"-45", 45"-48"	XBBC39-42U	933	—	933	823	BBC39-42U	871	—	871	871	761
	XBBC42-45U	979	—	979	858	BBC42-45U	917	—	917	917	796
	XBBC45-48U	1017	—	1017	892	BBC45-48U	955	—	955	955	830

Notes:
- On **Assembled** single door cabinets, hinged left (L) or hinged right (R) designation is required. Please add to the part number before the finish code.
- When ordering accessories for an assembled cabinet order, please use the "assembled" part numbers that begin with "X" regardless if the product requires assembly.

	ASSEMBLED					QUICKBUILD®					
	SKU	**CATALINA** Standard Finishes	**CATALINA** Accent Finishes	**MAUI** All Finishes	**HATTERAS** All Finishes	SKU	**CATALINA** Standard Finishes	**CATALINA** Accent Finishes	**CATALINA** Unfinished	**MAUI** All Finishes	**HATTERAS** All Finishes
PANTRY CABINET - 24" DEEP											
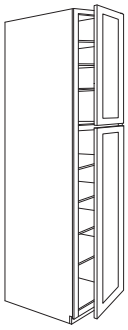 • Two single doors • Six shelves included • Available width: 18"	XUP1884L/R	1375	—	1375	1208	UP1884	1313	—	1313	1313	1146
	XUP1890L/R	1450	—	1450	1266	UP1890	1388	—	1388	1388	1204
	XUP1896L/R	1517	—	1517	1336	UP1896	1455	—	1455	1455	1274
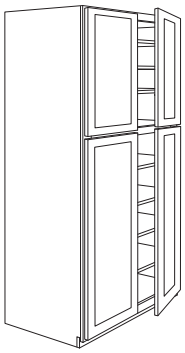 • Four Doors • Six shelves included • Available widths: 24" and 30"	XUP2484	1583	—	1583	1394	UP2484	1521	—	1521	1521	1332
	XUP2490	1647	—	1647	1451	UP2490	1585	—	1585	1585	1389
	XUP2496	1742	—	1742	1528	UP2496	1680	—	1680	1680	1466
	XUP3084	1785	—	1785	1593	UP3084	1723	—	1723	1723	1531
	XUP3090	1843	—	1843	1646	UP3090	1781	—	1781	1781	1584
	XUP3096	1946	—	1946	1688	UP3096	1884	—	1884	1884	1626

Notes:
- When ordering accessories for an assembled cabinet order, please use the "assembled" part numbers that begin with "X" regardless if the product requires assembly.

	ASSEMBLED					QUICKBUILD®					
	SKU	CATALINA Standard Finishes	CATALINA Accent Finishes	MAUI All Finishes	HATTERAS All Finishes	SKU	CATALINA Standard Finishes	CATALINA Accent Finishes	CATALINA Unfinished	MAUI All Finishes	HATTERAS All Finishes
UNIVERSAL OVEN CABINET - 24" DEEP											
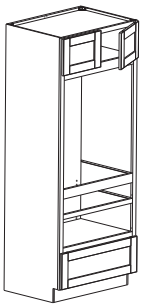 • Two butt doors on upper section • 84" and 90" - no shelf in upper section • 96" - one adjustable shelf in upper section • One drawer • Compatible with Universal Oven Drawer Kit for additional drawers when using a smaller appliance • Available width: 33"	XOVD3384U	1839	—	1839	1656	OVD3384U	1777	—	1777	1777	1594
	XOVD3390U	1900	—	1900	1705	OVD3390U	1838	—	1838	1838	1643
	XOVD3396U	1960	—	1960	1740	OVD3396U	1898	—	1898	1898	1678
UNIVERSAL OVEN DRAWER KIT											
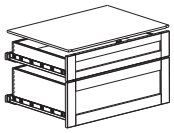 • Two drawers • Compatible with Universal Oven Cabinet	XOVD33D	—	—	—	—	OVD33D	700	—	700	700	600
DOUBLE OVEN CABINET - 24" DEEP											
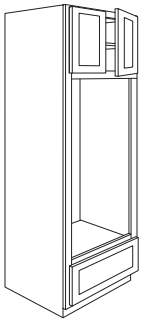 • Two butt doors on upper section • 84" and 90" - no shelf in upper section • 96" - one adjustable shelf in upper section • One drawer • Compatible with Double Oven Overlay Panel when using a smaller appliance • Available width: 33"	XOVD3384	1839	—	1839	1656	OVD3384	1777	—	—	1777	1594
	XOVD3390	1900	—	1900	1705	OVD3390	1838	—	—	1838	1643
	XOVD3396	1960	—	1960	1740	OVD3396	1898	—	—	1898	1678

	SKU Assembled / QuickBuild	ESPRESSO (-ESP)	SANDSTONE (-SD)	SLATE (-SL)	PEBBLE GREY (-PGRY)	POLAR WHITE (-PWH)	SHELL WHITE (-SW)	ACCENT COLORS (-SG) Sage Green (-NB) Nautical Blue	UNFINISHED (-UF)
DOUBLE OVEN PANEL OVERLAY									
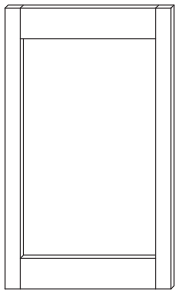 • Can be trimmed to size • Works with Premier & Essentials • Available width: 32-1/2"	XOVD33P / OVD33P	184	184	184	184	184	184	—	—

Notes:
- When ordering accessories for an assembled cabinet order, please use the "assembled" part numbers that begin with "X" regardless if the product requires assembly.

	ASSEMBLED					QUICKBUILD®					
	SKU	**CATALINA** Standard Finishes	**CATALINA** Accent Finishes	**MAUI** All Finishes	**HATTERAS** All Finishes	SKU	**CATALINA** Standard Finishes	**CATALINA** Accent Finishes	**CATALINA** Unfinished	**MAUI** All Finishes	**HATTERAS** All Finishes
KNEE DRAWERS											
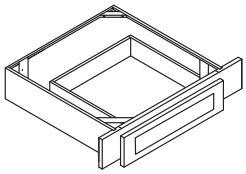 • Face frame can be trimmed up to 3" on either side of the drawer front • Available width: 30"	XKD30	345	—	345	303	KD30	283	—	283	283	241
MICROWAVE BASE CABINETS - 24" DEEP											
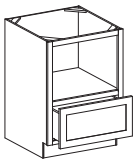 • One drawer • Available width: 30"	XMWB30	905	950	905	795	MWB30	843	885	843	843	733
MICROWAVE CABINETS - 12" DEEP											
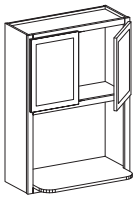 • Two butt doors • Available width: 30"	XMWC3036	663	—	663	582	MWC3036	601	—	601	601	520

	SKU Assembled / QuickBuild	**ESPRESSO** (-ESP)	**SANDSTONE** (-SD)	**SLATE** (-SL)	**PEBBLE GREY** (-PGRY)	**POLAR WHITE** (-PWH)	**SHELL WHITE** (-SW)	**ACCENT COLORS** (-SG) Sage Green (-NB) Nautical Blue	**UNFINISHED** (-UF)
MICROWAVE CABINET ENCLOSURE - 12" DEEP									
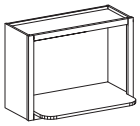 • Compatible with both Premier and Essentials cabinetry • Available width: 30"	XMWC3018	358	358	358	358	358	358	—	—
	MWC3018	296	296	296	296	296	296	—	—

Notes:
- On **Assembled** single door cabinets, hinged left (L) or hinged right (R) designation is required. Please add to the part number before the finish code.

	ASSEMBLED					QUICKBUILD®					
	SKU	**CATALINA** Standard Finishes	**CATALINA** Accent Finishes	**MAUI** All Finishes	**HATTERAS** All Finishes	SKU	**CATALINA** Standard Finishes	**CATALINA** Accent Finishes	**CATALINA** Unfinished	**MAUI** All Finishes	**HATTERAS** All Finishes
VANITY - FULL HEIGHT DOOR - 34-1/2" HIGH - 21" DEEP											
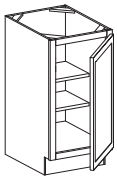 • Single full height door • Two adjustable half-depth shelves included • Available width: 12"	XVFH12	437	—	437	378	VFH12	375	—	375	375	316
VANITY - 34-1/2" HIGH - 21" DEEP											
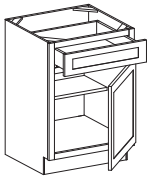 • Single door • One drawer • One adjustable half-depth shelf • Available widths: 12"-18"	XVB12	541	—	541	467	VB12	479	—	479	479	405
	XVB15	585	—	585	507	VB15	523	—	523	523	445
	XVB18	633	—	633	549	VB18	571	—	571	571	487
VANITY SINK BASE - 34-1/2" HIGH - 21" DEEP											
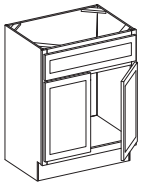 • Two butt doors • One false drawer front • 42" wide has center stile • Available widths: 24"-42"	XVSB24	643	—	643	567	VSB24	581	—	581	581	505
	XVSB27	675	—	675	591	VSB27	613	—	613	613	529
	XVSB30	706	—	706	616	VSB30	644	—	644	644	554
	XVSB33	741	—	741	643	VSB33	679	—	679	679	581
	XVSB36	777	—	777	669	VSB36	715	—	715	715	607
	XVSB42	835	—	835	728	VSB42	773	—	773	773	666
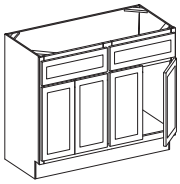 • Four doors (Two sets of butt doors) • Two false drawer fronts • Available width: 48"	XVSB48	904	—	904	790	VSB48	842	—	842	842	728
VANITY SINK DRAWER BASE - 34-1/2" HIGH - 21" DEEP – *NEW*											
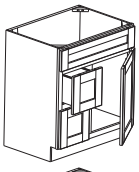 VSDB_L • Single door • One false drawer front • Two drawers - left or right • Available widths: 30" and 36"	XVSDB30L	1038	—	1038	924	VSDB30L	976	—	—	976	862
	XVSDB30R	1038	—	1038	924	VSDB30R	976	—	—	976	862
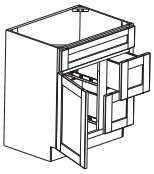 VSDB_R	XVSDB36L	1192	—	1192	1066	VSDB36L	1130	—	—	1130	1004
	XVSDB36R	1192	—	1192	1066	VSDB36R	1130	—	—	1130	1004

Notes:
- On **Assembled** single door cabinets, hinged left (L) or hinged right (R) designation is required. Please add to the part number before the finish code.

	ASSEMBLED					QUICKBUILD®					
	SKU	**CATALINA** Standard Finishes	**CATALINA** Accent Finishes	**MAUI** All Finishes	**HATTERAS** All Finishes	SKU	**CATALINA** Standard Finishes	**CATALINA** Accent Finishes	**CATALINA** Unfinished	**MAUI** All Finishes	**HATTERAS** All Finishes
VANITY THREE DRAWER BASE - 34-1/2" HIGH - 21" DEEP											
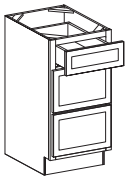 • Three drawers • Available widths: 12"-21"	XVDB12-3	824	—	824	702	VDB12-3	762	—	762	762	640
	XVDB15-3	882	—	882	760	VDB15-3	820	—	820	820	698
	XVDB18-3	945	—	945	823	VDB18-3	883	—	883	883	761
	XVDB21-3	1012	—	1012	892	VDB21-3	950	—	950	950	830
VANITY - 2 DRAWER COMBO - 34-1/2" HIGH - 21" DEEP											
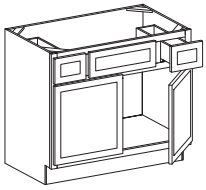 • Two butt doors • Two drawers • One false drawer front • 42" and 48" wide have center stile • Available widths: 36"-48"	XVBTD36	943	—	943	799	VBTD36	881	—	881	881	737
	XVBTD42	1033	—	1033	879	VBTD42	971	—	971	971	817
	XVBTD48	1142	—	1142	973	VBTD48	1080	—	1080	1080	911
VANITY - COMBO - 34-1/2" HIGH - 21"											
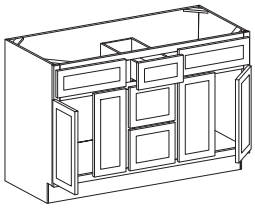 • Four doors (Two sets of butt doors) • One false drawer front • Three drawers • Available width: 60"	XVCDB60-3	1452	—	1452	1266	VCDB60-3	1390	—	1390	1390	1204
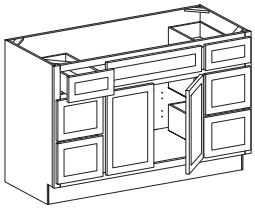 • Two butt doors • One false drawer front • Six drawers • Available width: 60"	XVCDB60-6	1865	—	1865	1568	VCDB60-6	1803	—	1803	1803	1506

Notes:
- On **Assembled** single door cabinets, hinged left (L) or hinged right (R) designation is required. Please add to the part number before the finish code.

	ASSEMBLED					QUICKBUILD®					
	SKU	**CATALINA** Standard Finishes	**CATALINA** Accent Finishes	**MAUI** All Finishes	**HATTERAS** All Finishes	SKU	**CATALINA** Standard Finishes	**CATALINA** Accent Finishes	**CATALINA** Unfinished	**MAUI** All Finishes	**HATTERAS** All Finishes
LINEN CABINETS - 84" HIGH - 21" DEEP											
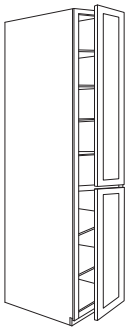 • Two single doors • Six shelves included • Available widths: 15" and 18"	XVL1584L/R	1129	—	1129	1012	VL1584	1067	—	1067	1067	950
	XVL1884L/R	1256	—	1256	1125	VL1884	1194	—	1194	1194	1063
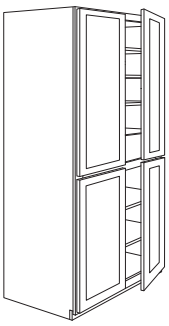 • Four doors - 2 sets of butt doors • Six shelves included • Available width: 24"	XVL2484	1497	—	1497	1333	VL2484	1435	—	1435	1435	1271

Notes:
- When ordering accessories for an assembled cabinet order, please use the "assembled" part numbers that begin with "X" regardless if the product requires assembly.

	SKU Assembled / QuickBuild	ESPRESSO (-ESP)	SANDSTONE (-SD)	SLATE (-SL)	PEBBLE GREY (-PGRY)	POLAR WHITE (-PWH)	SHELL WHITE (-SW)	ACCENT COLORS (-SG) Sage Green (-NB) Nautical Blue	UNFINISHED (-UF)
PLATE RACK									
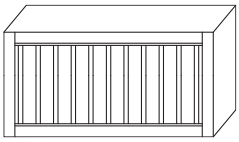 • Ships fully assembled • Available width: 30"	XPR3015 / PR3015	420	420	420	420	420	420	—	—
WINE RACK									
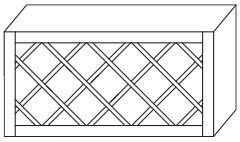 • Ships fully assembled • Available width: 30"	XWR3015 / WR3015	421	421	421	421	421	421	—	—
SLOTTED ORGANIZER									
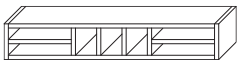 • Ships fully assembled • Available width: 36"	XORG36 / ORG36	223	223	223	223	223	223	—	—
VALANCE ARCHED									
• Available widths: 36" and 48"	XVAR36 / VAR36	91	91	91	91	91	91	—	91
	XVAR48 / VAR48	108	108	108	108	108	108	—	108
VALANCE SCALLOPED									
• Available width: 48"	XVSC48 / VSC48	108	108	108	108	108	108	—	108
RANGE HOODS									
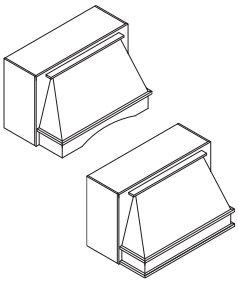 • Ships fully assembled • Range Hoods do not come with liners/blowers; modifications will be required to prep the hood for a ventilation unit • Works with Premier & Essentials • The box of these range hoods can be trimmed to size • Angled hood section can be removed from box and applied separately • Available width: 36"	XRHAR36 / RHAR36 (Arched)	595	595	595	595	595	—	—	—
	XRHCL36 / RHCL36 (Straight)	610	610	610	610	610	—	—	—

Notes:
- When ordering accessories for an assembled cabinet order, please use the "assembled" part numbers that begin with "X" regardless if the product requires assembly.

	ASSEMBLED					QUICKBUILD®					
	SKU	**CATALINA** Standard Finishes	**CATALINA** Accent Finishes	**MAUI** All Finishes	**HATTERAS** All Finishes	SKU	**CATALINA** Standard Finishes	**CATALINA** Accent Finishes	**CATALINA** Unfinished	**MAUI** All Finishes	**HATTERAS** All Finishes
WALL END PANEL - DECORATIVE											
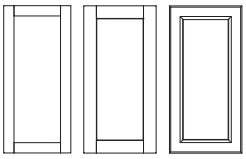 • 3/4" thick • Available width: 12"	XWDEP1230	152	—	152	152	WDEP1230	152	—	152	152	152
	XWDEP1236	174	—	174	174	WDEP1236	174	—	174	174	174
	XWDEP1242	204	—	204	204	WDEP1242	204	—	204	204	204
BASE END PANEL - DECORATIVE											
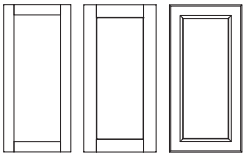 • 3/4" thick • Available width: 24"	XBDEP24	306	321	306	306	BDEP24	306	321	306	306	306
FULL HEIGHT DOOR FRONTS - DECORATIVE											
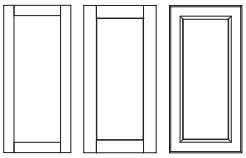 • Doors without hinge holes for Pull-out Organizers • Available widths: 9"-18"	XBFH09NB	153	161	153	153	BFH09NB	153	161	153	153	153
	XBFH12NB	184	193	184	184	BFH12NB	184	193	184	184	184
	XBFH15NB	214	225	214	214	BFH15NB	214	225	214	214	214
	XBFH18NB	245	257	245	245	BFH18NB	245	257	245	245	245

Notes:
- When ordering accessories for an assembled cabinet order, please use the "assembled" part numbers that begin with "X" regardless if the product requires assembly.

	SKU Assembled / QuickBuild	ESPRESSO (-ESP)	SANDSTONE (-SD)	SLATE (-SL)	PEBBLE GREY (-PGRY)	POLAR WHITE (-PWH)	SHELL WHITE (-SW)	ACCENT COLORS (-SG) Sage Green (-NB) Nautical Blue	UNFINISHED (-UF)
BACK PANEL									
• 1/4" x 36" x 48" • Vertical grain	XPV3648 / PV3648	225	225	225	225	225	225	—	225
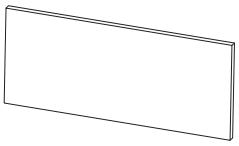 • 1/4" x 36" x 96" • Horizontal grain	XPH3696 / PH3696	255	255	255	255	255	255	268	255
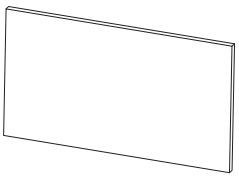 • 1/4" x 48" x 96" • Vertical grain	XPV4896 / PV4896	286	286	286	286	286	286	—	286
BACK PANEL - BEADED									
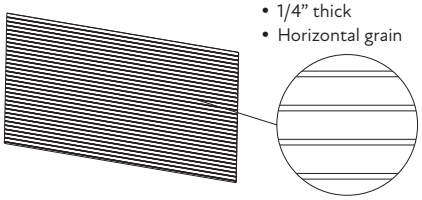 • 1/4" thick • Horizontal grain	XPBBH4896 / PBBH4896	340	340	340	340	340	340	—	340
WALL END PANEL									
• 1/4" x 11-1/4" x 42" • Vertical grain	XWEP1242 / WEP1242	36	36	36	36	36	36	—	36
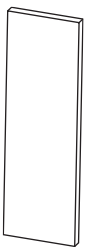 • 1/4" x 14-1/4" x 42" • Vertical grain	XWEP1542 / WEP1542	40	40	40	40	40	40	—	40

Notes:
- When ordering accessories for an assembled cabinet order, please use the "assembled" part numbers that begin with "X" regardless if the product requires assembly.

	SKU Assembled / QuickBuild	ESPRESSO (-ESP)	SANDSTONE (-SD)	SLATE (-SL)	PEBBLE GREY (-PGRY)	POLAR WHITE (-PWH)	SHELL WHITE (-SW)	ACCENT COLORS (-SG) Sage Green (-NB) Nautical Blue	UNFINISHED (-UF)
BASE END PANEL									
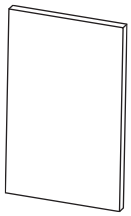 • 1/4" x 23-1/4" x 34-1/2" • Vertical grain	XBEP24 / BEP24	52	52	52	52	52	52	55	52
TALL END PANEL									
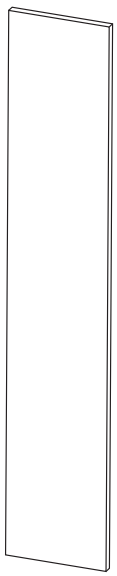 • 1/4" x 23-1/4" x 96" • Vertical grain	XTEP96 / TEP96	115	115	115	115	115	115	—	115
REFRIGERATOR END PANEL									
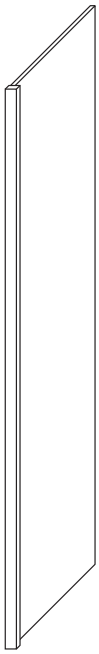 • REP24-.75 - 3/4" x 24" x 96" • REP24-1.5 - 1-1/2" x 24" x 96" • REP30-.75 - 3/4" x 30" x 96" • REP30-1.5 - 1-1/2" x 30" x 96" • Vertical grain	XREP24-.75 / REP24-.75	300	300	300	300	300	300	—	300
	XREP24-1.5 / REP24-1.5	318	318	318	318	318	318	—	318
	XREP30-.75 / REP30-.75	338	338	338	338	338	338	—	338
	XREP30-1.5 / REP30-1.5	346	346	346	346	346	346	—	346

Notes:
- When ordering accessories for an assembled cabinet order, please use the "assembled" part numbers that begin with "X" regardless if the product requires assembly.

	SKU Assembled / QuickBuild	ESPRESSO (-ESP)	SANDSTONE (-SD)	SLATE (-SL)	PEBBLE GREY (-PGRY)	POLAR WHITE (-PWH)	SHELL WHITE (-SW)	ACCENT COLORS (-SG) Sage Green (-NB) Nautical Blue	UNFINISHED (-UF)
DISHWASHER END PANEL									
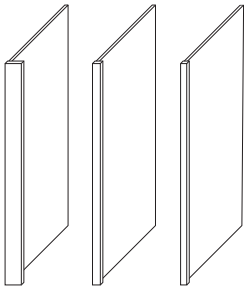 • DWEP1.5 - 1-1/2" x 24" x 34-1/2" • DWEP3 - 3" x 24" x 34-1/2" • DWEP6 - 6" x 24" x 34-1/2" • Vertical grain	XDWEP1.5 / DWEP1.5	140	140	140	140	140	140	147	140
	XDWEP3 / DWEP3	144	144	144	144	144	144	151	144
	XDWEP6 / DWEP6	154	154	154	154	154	154	162	154
FILLER									
• 3/4" thick • Fillers can be cut to length • 3" or 6" wide	XF330 / F330	24	24	24	24	24	24	25	24
	XF342 / F342	30	30	30	30	30	30	—	30
	XF396 / F396	128	128	128	128	128	128	—	128
	XF630 / F630	46	46	46	46	46	46	48	46
	XF642 / F642	53	53	53	53	53	53	—	53
	XF696 / F696	188	188	188	188	188	188	—	188
FILLER - FLUTED									
• 3/4" thick • Fillers can be cut to length • 3" wide	XFF330 / FF330	31	31	31	31	31	31	—	31
	XFF336 / FF336	32	32	32	32	32	32	—	32
	XFF342 / FF342	35	35	35	35	35	35	—	35
	XFF396 / FF396	136	136	136	136	136	136	—	136

Notes:
- When ordering accessories for an assembled cabinet order, please use the "assembled" part numbers that begin with "X" regardless if the product requires assembly.

SKU Assembled / QuickBuild	ESPRESSO (-ESP)	SANDSTONE (-SD)	SLATE (-SL)	PEBBLE GREY (-PGRY)	POLAR WHITE (-PWH)	SHELL WHITE (-SW)	ACCENT COLORS (-SG) Sage Green (-NB) Nautical Blue	UNFINISHED (-UF)
FILLER - OVERLAY								
XFO330 / FO330	31	31	31	31	31	31	—	31
XFO336 / FO336	32	32	32	32	32	32	—	32
XFO342 / FO342	35	35	35	35	35	35	—	35
XFO396 / FO396	136	136	136	136	136	136	—	136
XFO630 / FO630	60	60	60	60	60	60	—	60
XFO636 / FO636	66	66	66	66	66	66	—	66
XFO642 / FO642	75	75	75	75	75	75	—	75
BASE FILLER								
XBF3 / BF3	38	38	38	38	38	38	—	38
XBF6 / BF6	60	60	60	60	60	60	—	60

- 3/4" thick
- Fillers can be cut to length
- 2-1/2" or 5-1/2" wide

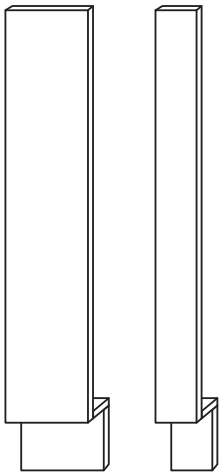

- 3/4" thick
- Fillers can be cut to length
- 3" or 6" wide

Notes:
- When ordering accessories for an assembled cabinet order, please use the "assembled" part numbers that begin with "X" regardless if the product requires assembly.

	SKU Assembled / QuickBuild	ESPRESSO (-ESP)	SANDSTONE (-SD)	SLATE (-SL)	PEBBLE GREY (-PGRY)	POLAR WHITE (-PWH)	SHELL WHITE (-SW)	ACCENT COLORS (-SG) Sage Green (-NB) Nautical Blue	UNFINISHED (-UF)
MOULDING - BATTEN									
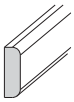	XBM8 / BM8	41	41	41	41	41	41	43	41
MOULDING - CROWN									
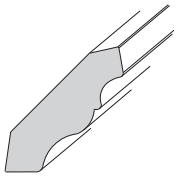	XCM8 / CM8	183	183	183	183	183	183	—	183
MOULDING - CROWN ANGLED									
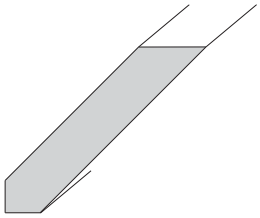	XCMA8 / CMA8	236	236	236	236	236	236	—	236
MOULDING - CROWN CLASSIC									
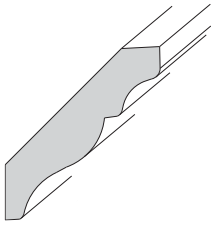	XCMC8 / CMC8	241	241	241	241	241	241	—	241
MOULDING - CROWN COVE									
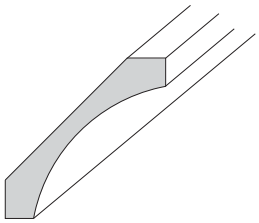	XCMV8 / CMV8	236	236	236	236	236	236	—	236
MOULDING - DENTIL									
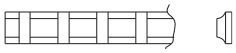	XDM8 / DM8	49	49	49	49	49	49	—	49
MOULDING - INSIDE CORNER									
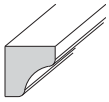	XICM8 / ICM8	46	46	46	46	46	46	48	46

Notes:
- When ordering accessories for an assembled cabinet order, please use the "assembled" part numbers that begin with "X" regardless if the product requires assembly.

	SKU Assembled / QuickBuild	ESPRESSO (-ESP)	SANDSTONE (-SD)	SLATE (-SL)	PEBBLE GREY (-PGRY)	POLAR WHITE (-PWH)	SHELL WHITE (-SW)	ACCENT COLORS (-SG) Sage Green (-NB) Nautical Blue	UNFINISHED (-UF)
MOULDING - LIGHT RAIL BULL NOSE									
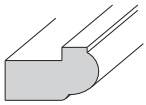	XLRB8 / LRB8	93	93	93	93	93	93	—	93
MOULDING - LIGHT RAIL DECORATIVE									
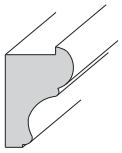	XLRD8 / LRD8	102	102	102	102	102	102	—	102
MOULDING - LIGHT RAIL FOR TAPE LIGHTING									
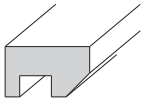	XLRS8 / LRS8	82	82	82	82	82	82	—	82
MOULDING - OUTSIDE CORNER 135									
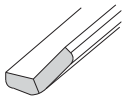	XOCM8-135 / OCM8-135	48	48	48	48	48	48	—	48
MOULDING - OUTSIDE CORNER									
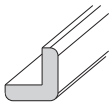	XOCM8 / OCM8	49	49	49	49	49	49	51	49
MOULDING - QUARTER ROUND									
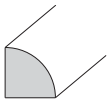	XQR8 / QR8	42	42	42	42	42	42	44	42
MOULDING - ROPE									
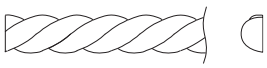	XRM8 / RM8	42	42	42	42	42	42	—	42
MOULDING - SCRIBE									
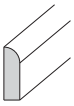	XSCM8 / SCM8	41	41	41	41	41	41	43	41

Notes:
- When ordering accessories for an assembled cabinet order, please use the "assembled" part numbers that begin with "X" regardless if the product requires assembly.

	SKU Assembled / QuickBuild	ESPRESSO (-ESP)	SANDSTONE (-SD)	SLATE (-SL)	PEBBLE GREY (-PGRY)	POLAR WHITE (-PWH)	SHELL WHITE (-SW)	ACCENT COLORS (-SG) Sage Green (-NB) Nautical Blue	UNFINISHED (-UF)
MOULDING - SHOE									
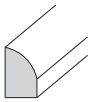	XSHM8 / SHM8	42	42	42	42	42	42	44	42
MOULDING - TOEKICK									
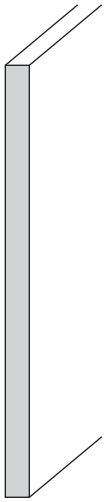	XTKC8 / TKC8	29	29	29	29	29	29	30	29
MOULDING - FURNITURE BASE									
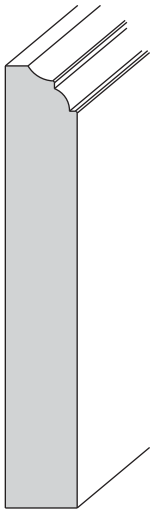	XFB8 / FB8	238	238	238	238	238	238	250	238

Notes:
- When ordering accessories for an assembled cabinet order, please use the "assembled" part numbers that begin with "X" regardless if the product requires assembly.

	SKU Assembled / QuickBuild	ESPRESSO (-ESP)	SANDSTONE (-SD)	SLATE (-SL)	PEBBLE GREY (-PGRY)	POLAR WHITE (-PWH)	SHELL WHITE (-SW)	ACCENT COLORS (-SG) Sage Green (-NB) Nautical Blue	UNFINISHED (-UF)
BUN FOOT									
	XBUNFOOT / BUNFOOT	62	62	62	62	62	62	—	—
	XHBUNFOOT / HBUNFOOT	55	55	55	55	55	55	—	—
TAPERED FOOT									
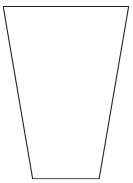	XHTFOOT / HTFOOT	54	54	54	54	54	54	—	—
	XTFOOT / TFOOT	59	59	59	59	59	59	—	—
LEG									
	XDECOLEG / DECOLEG	444	444	444	444	444	444	—	—
	XSDECOLEG / SDECOLEG	325	325	325	325	325	325	—	—
CORBELS									
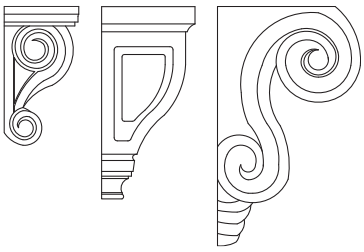	XCORBEL-B / CORBEL-B	236	236	236	236	236	236	—	—
	XCORBEL-LS / CORBEL-LS	392	392	392	392	392	392	—	—
	XCORBEL-S / CORBEL-S	266	266	266	266	266	266	—	—
VANITY TRIM KIT									
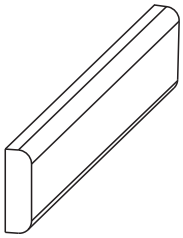 **Note:** • Each kit includes 10 packs (2 pieces per pack)	XVTRIMKIT / VTRIMKIT	80	80	80	80	80	80	—	—

	SKU Assembled / QuickBuild	ECONOMY (-ECO)	MIDLINE (-MID)
ROLLOUT TRAYS			
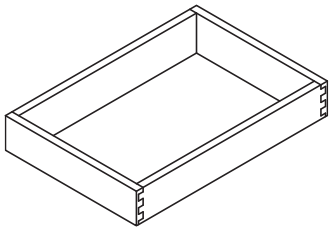 • Drawer slides included • MID slides are soft-close • ECO slides are self-close • This product ships unassembled; will ship assembled by request	XROT15	173	200
	ROT15	111	138
	XROT18	201	214
	ROT18	139	152
	XROT21	220	233
	ROT21	158	171
	XROT24	230	251
	ROT24	168	189
	XROT27	249	267
	ROT27	187	205
	XROT30	265	277
	ROT30	203	223
	XROT33	277	302
	ROT33	215	240
	XROT36	313	329
	ROT36	251	267
LAZY SUSANS			
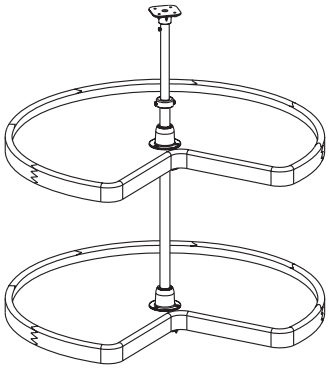 • MLS = Polished Chrome • PLS = White Plastic • WLS = UV Coated Wood • This product ships unassembled; assembled option available with base corner cabinets	XRTA-MLS28 / RTA-MLS28	219	—
	XRTA-PLS28 / RTA-PLS28	194	—
	XRTA-WLS28 / RTA-WLS28	459	—

Notes:
- When ordering accessories for an assembled cabinet order, please use the "assembled" part numbers that begin with "X" regardless if the product requires assembly.

SKU Assembled / QuickBuild	ESPRESSO (-ESP)	SANDSTONE (-SD)	SLATE (-SL)	PEBBLE GREY (-PGRY)	POLAR WHITE (-PWH)	SHELL WHITE (-SW)	ACCENT COLORS (-SG) Sage Green (-NB) Nautical Blue	UNFINISHED (-UF)
TOUCH-UP KITS								
XTUKITS / TUKITS	83	83	83	83	83	83	83	—
XTUPEN / TUPEN	54	54	54	54	54	54	54	—
XTUPSTICK / TUPSTICK	29	29	29	29	29	29	29	—
XNPC-AERO / NPC-AERO	56	56	56	56	56	56	—	—

- Touch-up kit (pen + putty)
- Touch-up pen
- Touch-up putty stick
- Aerosol spray can

Notes:
- Add style and finish code to these items when ordering
- Example: SAMD-HES for Hatteras Espresso sample door

	ASSEMBLED					QUICKBUILD®					
	SKU	CATALINA Standard Finishes	CATALINA Accent Finishes	MAUI All Finishes	HATTERAS All Finishes	SKU	CATALINA Standard Finishes	CATALINA Accent Finishes	CATALINA Unfinished	MAUI All Finishes	HATTERAS All Finishes
SAMPLE DOOR - 11" X 15"											
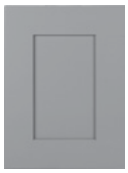	XSAMD	62	62	62	62	SAMD	62	62	62	62	62
SAMPLE BASE FRONT - 15"											
	XSAMB15	175	—	175	175	SAMB15	175	—	175	175	175
SAMPLE MINI BASE CABINET - 12"											
	XSAMMB	288	—	288	—	SAMMB	226	—	226	226	—

		SKU	PRICE
SAMPLE DOOR KIT			
	• Includes all sample doors (does not include accent colors or unfinished) • Includes a 5 door carrying case with North Point logo	CAB-DOORKIT-V1	485
SAMPLE DOOR BAG			
	• Holds 5 sample doors • Black padded carry bag with handles	CAB-SAM-BAG	227
FREESTANDING SELECTION CENTER			
	• 60” W x 85” H x 25” D • One cabinet in each door style • Door samples with informational backers • Moulding sample boards included • Optional add-ons for decorative hardware and organizers • Some assembly required • Ask your sales representative for details	NPCDIS-SC	8100
WALL-MOUNTED SELECTION CENTER			
	• 42” W x 48” H x 12-13/16” D • Black backboard with hanging hardware • Door samples with informational backers • NorthPoint Cabinetry graphic panel and acrylic logo header • Minimal assembly required	NPCDIS-WMD	3200
MOULDING SAMPLE KIT			
	• Includes 3” moulding samples in Slate finish	BX-SAM-MLD-SL	314
FINISH SWATCH KIT			
	• Includes 5 finish swatch samples (Espresso, Sandstone, Slate, Pebble Grey, and Polar White) and marketing cards • Swatch refills available for purchase; SKU: RF-SWKIT-(Finish)	CAB-SWATCHKIT	149
		RF-SWKIT-ESP	42
		RF-SWKIT-NB	42
		RF-SWKIT-PGRY	42
		RF-SWKIT-PWH	42
		RF-SWKIT-SD	42
		RF-SWKIT-SG	42
		RF-SWKIT-SL	42
		RF-SWKIT-SW	42
		RF-SWKIT-UF	42
		RF-SWKIT-CARDS	16

Waste Container Solutions

Cabinet	**Wood Bottom Mount - Double Can**	CDM-WBMD35X	CAN-WBMD35X	CDM-WBMD3518X	CAN-WBMD3518X	CDM-WBMD3521X	CDM-WBMD50X	CAN-WBMD50X	**Wood Bottom Mount - Single Can**	CDM-WBMS35X	CAN-WBMS35X	CAN-WBMS35VX	CDM-WBMS50X	CAN-WBMS50X	**Wood Top Mount - Double Can**	CAN-TMD1535X-K	CAN-TMD1835X-K	CAN-TMD2135X-K	**Wood Top Mount - Single Can**	CAN-TMS1235X-K	CAN-TMS1250X-K	CAN-TMS1535X-K	CAN-TMS1550X-K
B15										•	•	•								•			
B18		•	•													•						•	
B21				•	•												•						
B24						•												•					
BFH15										•	•		•	•						•	•		
BFH18		•	•				•	•								•						•	•
VB15												•											

CDM-WBMD35X

CAN-TMD1550X-K

CAN-EBMDXX

SWS-MBMD35GBN

Cabinet	**Wire - Double Can**	CAN-EBMDXX	CAN-EBMD50XX	**Wire - Single Can**	CAN-EBMSXX	**Metal - Double Can**	CAN-MDB5-D35G	CAN-MDB5-D50G	**Metal - Single Can**	CAN-MDB5-S35G	**Storage with Style - Double Can**	SWS-MBMD35GXX	SWS-MBMD50GXX	**Storage with Style - Single Can**	SWS-MBMS35GXX
B15					•					•					•
B18		•					•					•			
BFH15					•					•					•
BFH18		•	•				•	•				•	•		

Cross Reference Guide: Organizers

Base Cabinet Solutions

Cabinet	**Base Pullouts**	BPO2-5SC	BPO2-8SC	BPO2-11SC	BPO2-14SC	DBPO-8SC	UBPO-5SC	UBPO-8SC	BPOTD2-5SC	BPOTD2-8SC	KBPO-5SC	KBPO-8SC	PTBPO2-8SC	**Storage with Style**	SWS-BPO5XX	SWS-BPO8XX	SWS-DBPO8XX	SWS-UBPO8	**Mixer Lift**	ML-1CH	ML-1CH-12S	ML-1CH-15S	**Wire Pullouts**	SCPO2-R	MPLO215-R	MPPO215-R	MBPO15-R	MBPO18-R	MBPO21-R	**Under-Sink Mat**	USM-G
BFH09		•					•		•		•				•																
BFH12			•					•		•		•	•			•		•		•											
BFH15				•																•	•			•	•	•	•				
BFH18					•															•		•		•	•	•		•			
B12						•			•	•							•														
B15																								•	•	•	•				
B18																								•	•	•		•			
B21																													•		
SB36																															•
SBF36																															•

BPO2-8SC

DBPO-8SC

UBPO-8SC

BPOTD2-8SC

KBPO-8SC

PTBPO2-8SC

SWS-BPO8BN

SWS-DBPO8BN

SWS-UBPO8

ML-1CH

SCPO2-R

MPLO215-R & MPPO215-R

MBPO18-R

USM-G

Cross Reference Guide: Organizers

Rollout Solutions

Cabinet	**Wood Rollouts**	RO12	RO15	RO18	RO21	RO24	RO27	RO33	**Cookware & Bottle Rollouts**	ROBTD15-WB	ROBTD21-WB	ROBTD27-WB	ROCWS15-WB	ROCWS21-WB	ROCWS27-WB	ROCWD15-WB	ROCWD21-WB	ROCWD27-WB
B15		•																
B18			•							•			•			•		
B21				•														
B24					•						•			•			•	
B27						•												
B30							•					•			•			•
B36								•										

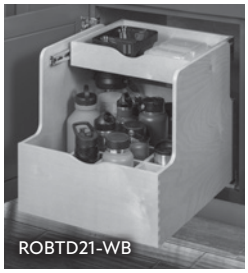
ROBTD21-WB

ROCWS21-WB

ROCWD21-WB

RO18-WB

Drawer Solutions

Cabinet	**Inserts**	CO15A	CO21A	CD15	CD18	CD21	CD24	DO15A-B18	DO21A-B24	KO18-B21	SPO15-B18	SPO24-B27	AU021-B24	KCCO15	KCCO21	KNCD15	KNCD21	**Tipout Tray**	TO11/TOSS11	TO14/TOSS14	**Charging Drawers**	PD15-SC *NEW*	PD21-SC *NEW*	PD27-SC *NEW*
B15		•		•				•						•										
B18		•			•			•			•			•		•						•		
B21			•			•			•	•	•				•									
B24			•				•		•	•	•		•		•		•						•	
B27			•						•	•		•	•											
B30																								•
SB30																			•					
SB33																			•					
SB36																			•	•				
SB39																			•	•				
DB18-3																						•		
DB24-3																							•	
DB30-3																								•

DO15A-B18

KO18-B21

SPO15-B18

AU021-B24

KNCD21

TOSS14

NEW
PD27-SC

Cross Reference Guide: Organizers

Base Corner Solutions

Cabinet	**Blind Corner Organizers**	HMLS-3212	HMLS-3515	SWS-BCS15XX	BCSO215XX	**Corner Organizers**	CS-ES360	LSKNP27 *NEW*	LSKNP31 *NEW*	**Wood Lazy Susans**	BLSK232	LSK232	LSK32-S	BLSK32-S	BLSK232-SET	LSK32/LSK32H + LSP2	**Plastic Lazy Susans**	PLSK232	PLSMK32
BBC42-45U		•																	
BBC45-48U			•	•	•														
BC33U								•											
BC36U							•		•		•	•	•	•	•	•		•	•

HMLS-3212

SWS-BCS15BN

BCSO215PCMP-LH

CS-ES360

PLSK232

PLSMK32

NEW
LSKNP31

Overhead Appliance Solutions

Cabinet	**Universal Overhead Swingout**	UOHSO-15SC *NEW*
OVD3384		•
OVD3390		•
OVD3396		•
OVD3384U		•
OBD3390U		•
OVD3396U		•
W361824		•
W391824		•
W362424		•
W392424		•

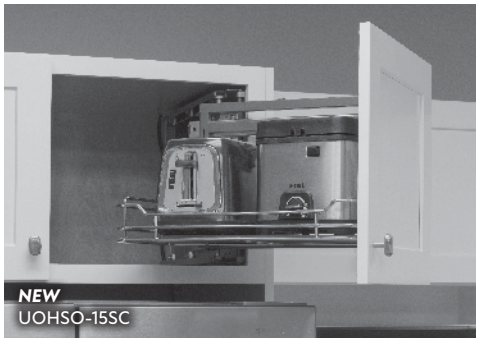
NEW
UOHSO-15SC

Pantry Solutions

Cabinet	**Pantry Pullouts**	PPO2-1448	**Storage with Style**	SWS-WB153XX + SWS-PILKIT	SWS-WB213XX + SWS-PILKIT	SWS-WB273XX + SWS-PILKIT	**Tray Dividers**	TD12-PC	TD18-PC	TD3
UP1896		•		•						
UP1890		•		•					•	•
UP1884		•		•				•		•
UP2496					•					
UP2490					•				•	•
UP2484					•			•		•
UP3096						•				
UP3090						•			•	•
UP3084						•		•		•

PPO2-1448

SWS-WB213XX + SWS-PILKIT

TD18-PC

TD3

Wall Corner Solutions

Cabinet	**Corner Organizers**	LSRNP18 *NEW*	**Wood Lazy Susan**	BLSR218-SET	BLSR2318-SET	BLSR18-S	BLSR2320-SET	BLSR220-SET	BLSR20-S	LSR218-SET	LSR2318-SET	LSR18-S	**Plastic Lazy Susan**	PLSMR18	PLSMR318	PLSR218	PLSR2318	**Wire Lazy Susan**	MLSR18-S-R
WDC2430		•		•		•				•		•		•		•			•
WDC2436		•		•		•				•	•	•		•	•	•			•
WDC2442		•			•						•	•			•		•		•
WDC273615								•	•										
WDC274215							•		•										

NEW
LSRNP18

BLSR218-SET

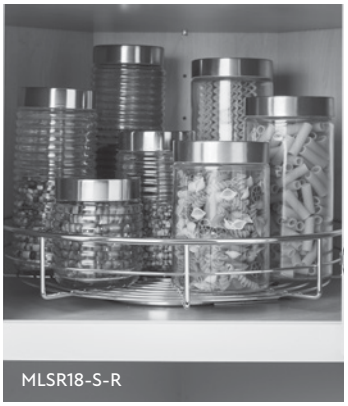
MLSR18-S-R

Cross Reference Guide: Organizers

Wall Cabinet Solutions

Cabinet	**Wall Pullouts**	WPO2-265SC	WPO2-268SC	WPO2-325SC	WPO2-328SC	**Door Mounted**	SPR9A	SPR12A	SPR15A	DMS3-PC-R	DMS6-PC-R	**Spice Pulldown**	TTSPD-R
W0930		•											
W0936				•									
W1230			•										
W1236					•								
W1530							•			•	•		
W1536							•			•	•		•
W1542							•			•	•		
W1830								•					•
W1836								•					•
W1842								•					•
W2130									•				
W2136									•				
W2142									•				
W2730							•			•	•		
W2736							•			•	•		•
W2742							•			•	•		
W3312													•
W3315													•
W3318													•
W3324													•
W3330								•					•
W3336								•					•
W3342								•					•
W4236									•				

WPO2-268SC

SPR9A

DMS6-PC-R

TTSPD-R

Vanity Cabinet Solutions

Cabinet	**Vanity Pullouts**	VBPO-8SC	VBPO-8SC & VBPO-G01	**Powered Vanity Pullouts**	PVGD15-SC	PVBPOD8-SC	PVBPOD11-SC	PVBPOF8-SC	**Charging Drawer**	PVD15-SC *NEW*	**Vanity Trash Can Pullouts**	CAN-WBMS35VXX	CDM-WBMS35VXX	**Vanity Drawer Insert**	VO12A	VO18A	**Tipout Tray**	TO11/TOSS11	TO14/TOSS14	**Wood Rollouts**	ROVHB12-WB	ROVHB15-WB	ROVHB18-WB	30URO-4WB *NEW*	36URO-4WB *NEW*	**Wire Pullouts**	SCPO2-R	MBPO15-R	MBPO18-R	MBPO21-R
VB12		•				•									•															
VB15							•					•	•		•						•									
VB18										•						•						•					•	•		
VFH12			•					•																			•		•	
VDB12-3															•															
VDB15-3															•												•	•		
VDB18-3					•					•						•											•		•	
VDB21-3																•														•
VSDB30L																		•				•						•		
VSDB30R																		•				•						•		
VSDB36L																			•				•						•	
VSDB36R																			•				•						•	
VBTD42															•								•							
VBTD48															•															
VSB27																		•												
VSB30																		•						•						
VSB33																			•											
VSB36																			•						•					
VSB42																			•				•							

VBPO-8SC

VBPO-8SC
VBPO-G01

PVGD-15SC

CDM-WBMS35VG

NEW
PVD15-SC

PVBPOF11-SC

VO18A

SCPO2-R

ROVHB12-WB

NEW
30URO-4WB

Cross Reference Guide: Sinks

Kitchen Sinks (Stainless Steel)

Cabinet	**Farmhouse / Apron**	HA200	HA225	**Undermount**	HMS190	HMS200	HMS250	HMS260L	801L	801L-18	801R-18	802	802-18	807L	868	**Drop-in**	910-1
SB30					•										•		
SB33					•	•	•	•	•	•	•	•	•	•	•		•
SB36					•	•	•	•	•	•	•	•	•	•	•		•
SB39					•	•	•	•	•	•	•	•	•	•	•		•
SBF36		•	•														
SBF39		•	•														

HA200

HA225

807L

802

801L

HMS250

HMS260L

HMS200

HMS190

868

910-1

Utility Sinks

Cabinet	Undermount (SS)	HMS175	861	862	863	869
VSB24		•	•	•	•	•
VSB27		•	•	•		
VSB30		•	•	•		
B24*		•	•	•	•	•
SB30		•	•	•		
SB33		•	•	•		
SB36		•	•	•		
SB39		•	•	•		

*Slight modification may be necessary

HMS175

861

863

862

869

Bathroom Sinks

Cabinet	Porcelain - Oval	H8809	H8810	H8809WH	H8810WH	Porcelain - Rectangle	H8909WH	H8910WH
VSB24		•	•	•	•		•	•
VSB27		•	•	•	•		•	•
VSB30		•	•	•	•		•	•
VSB33		•	•	•	•		•	•
VSB36		•	•	•	•		•	•
VSB42		•	•	•	•		•	•
VSB48		•	•	•	•		•	•
VSDB30L		•	•	•	•		•	•
VSDB30R		•	•	•	•		•	•
VSDB36L		•	•	•	•		•	•
VSDB36R		•	•	•	•		•	•
VBTD36		•	•	•	•		•	•
VBTD42		•	•	•	•		•	•
VBTD48		•	•	•	•		•	•
VCDB60-3		•	•	•	•		•	•
VCDB60-6		•	•	•	•		•	•

H8809WH

H8909WH

H8810WH

H8910WH

Cross Reference Guide: Lighting

Linear Fixture Lighting Made Easy

Linear fixtures are sized to fit standard cabinet widths and come in several profile options. Use the **Angled Profile (P3)** under cabinets, inside cabinets, or in the toe kick to angle light where it's needed. Use the **Flat Profile (P7)** under cabinets to illuminate the workspace directly below. Use the **Recessed Profile (PX)** under cabinets or shelves for a flush, sleek finish. Use the multi-purpose **Dual-Mount Profile (PD)** for surface- or recess-mounted applications. Use the **Premium Flat Profile (PF)** for a sleek, finished look under cabinets.

The Standard, High, and Higher Output Tunable-White fixtures have tunable-white color temperatures that allow users to change the color temperature from 2700K to 5000K and anywhere in between.

300 lm./ft. Standard Output Tunable-White Fixture Example *Angled Profile, 12V*

Profile Option

LT2P312V09-03W

400 lm./ft. High Output Tunable-White Fixture Example *Flat Profile, 24V*

Profile Option

LT4P724V21-06W

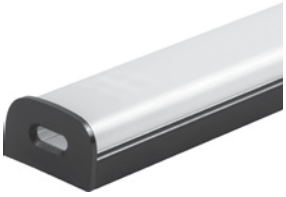

600 lm./ft. Higher Output Tunable-White Fixture Example *Premium Flat Profile, 24V*

Profile Option

LT6PF24V42-B18W

600 lm./ft. Higher Output Tunable-White Fixture Example *Dual-Mount Profile, 24V*

Profile Option

LT6PD24V48-19W

600 lm./ft. Higher Output Tunable-White Fixture Example *Recessed Profile, 24V*

Profile Option

LT6PX24V42-18W

Looking for single-white linear fixtures?

Scan the QR code or visit https://delivr.com/2a79b for more information.

	300 lm./ft. Standard Output Tunable-White Fixtures (12V)	300 lm./ft. Standard Output Tunable-White Fixtures (24V)	400 lm./ft. High Output Tunable-White Fixtures (24V)	600 lm./ft. Higher Output Tunable-White Fixtures (24V)
9” Cabinets Standard Output (12V & 24V) Tunable-White Fixture Length P3, P7, & PX Profiles: 5-1/8” PD Profile: 6-7/16” High & Higher Output Tunable-White Fixture Length P3, P7, PF, & PX Profiles: 5-11/16” PD Profiles: 7”	LT2**P3**12V09-03W	LT2**P3**24V09-03W	LT4**P3**24V09-03W	LT6**P3**24V09-03W
	LT2**P7**12V09-03W	LT2**P7**24V09-03W	LT4**P7**24V09-03W	LT6**P7**24V09-03W
	LT2**PX**12V09-03W	LT2**PX**24V09-03W	LT4**PX**24V09-03W	LT6**PX**24V09-03W
	—	LT3**PD**24V09-02W	LT4**PD**24V09-02W	LT6**PD**24V09-03W
	—	—	—	LT6**PF**24V09-**Color**03W

	300 lm./ft. Standard Output Tunable-White Fixtures (12V)	300 lm./ft. Standard Output Tunable-White Fixtures (24V)	400 lm./ft. High Output Tunable-White Fixtures (24V)	600 lm./ft. Higher Output Tunable-White Fixtures (24V)
12” Cabinets Standard Output (12V & 24V) Tunable-White Fixture Length P3, P7, & PX Profiles: 7-5/16” PD Profile: 8-9/16” High & Higher Output Tunable-White Fixture Length P3, P7, PF, & PX Profiles: 8-1/8” PD Profiles: 9-7/16”	LT2**P3**12V12-03W	LT2**P3**24V12-03W	LT4**P3**24V12-03W	LT6**P3**24V12-04W
	LT2**P7**12V12-03W	LT2**P7**24V12-03W	LT4**P7**24V12-03W	LT6**P7**24V12-04W
	LT2**PX**12V12-03W	LT2**PX**24V12-03W	LT4**PX**24V12-03W	LT6**PX**24V12-04W
	—	LT3**PD**24V12-02W	LT4**PD**24V12-03W	LT6**PD**24V12-04W
	—	—	—	LT6**PF**24V12-**Color**04W

	300 lm./ft. Standard Output Tunable-White Fixtures (12V)	300 lm./ft. Standard Output Tunable-White Fixtures (24V)	400 lm./ft. High Output Tunable-White Fixtures (24V)	600 lm./ft. Higher Output Tunable-White Fixtures (24V)
15” Cabinets Standard Output (12V & 24V) Tunable-White Fixture Length P3, P7, & PX Profiles: 11-11/16” PD Profile: 10-3/4” High & Higher Output Tunable-White Fixture Length P3, P7, PF, & PX Profiles: 10-5/8” PD Profiles: 11-15/16”	LT2**P3**12V15-04W	LT2**P3**24V15-04W	LT4**P3**24V15-04W	LT6**P3**24V15-06W
	LT2**P7**12V15-04W	LT2**P7**24V15-04W	LT4**P7**24V15-04W	LT6**P7**24V15-06W
	LT2**PX**12V15-04W	LT2**PX**24V15-04W	LT4**PX**24V15-04W	LT6**PX**24V15-06W
	—	LT3**PD**24V15-03W	LT4**PD**24V15-03W	LT6**PD**24V15-05W
	—	—	—	LT6**PF**24V15-**Color**06W

Cross Reference Guide: Lighting

	300 lm./ft. Standard Output Tunable-White Fixtures (12V)	300 lm./ft. Standard Output Tunable-White Fixtures (24V)	400 lm./ft. High Output Tunable-White Fixtures (24V)	600 lm./ft. Higher Output Tunable-White Fixtures (24V)
18” Cabinets Standard Output (12V & 24V) Tunable-White Fixture Length P3, P7, & PX Profiles: 13-7/8” PD Profile: 15-1/16” High & Higher Output Tunable-White Fixture Length P3, P7, PF, & PX Profiles: 15-1/2” PD Profiles: 14-3/8”	LT2**P3**12V18-05W	LT2**P3**24V18-05W	LT4**P3**24V18-05W	LT6**P3**24V18-07W
	LT2**P7**12V18-05W	LT2**P7**24V18-05W	LT4**P7**24V18-05W	LT6**P7**24V18-07W
	LT2**PX**12V18-05W	LT2**PX**24V18-05W	LT4**PX**24V18-05W	LT6**PX**24V18-07W
	—	LT3**PD**24V18-04W	LT4**PD**24V18-04W	LT6**PD**24V18-06W
	—	—	—	LT6**PF**24V18-**Color**07W

	300 lm./ft. Standard Output Tunable-White Fixtures (12V)	300 lm./ft. Standard Output Tunable-White Fixtures (24V)	400 lm./ft. High Output Tunable-White Fixtures (24V)	600 lm./ft. Higher Output Tunable-White Fixtures (24V)
21” Cabinets Standard Output (12V & 24V) Tunable-White Fixture Length P3, P7, & PX Profiles: 18-3/16” PD Profile: 17-1/4” High & Higher Output Tunable-White Fixture Length P3, P7, PF, & PX Profiles: 18” PD Profiles: 16-13/16”	LT2**P3**12V21-06W	LT2**P3**24V21-06W	LT4**P3**24V21-06W	LT6**P3**24V21-09W
	LT2**P7**12V21-06W	LT2**P7**24V21-06W	LT4**P7**24V21-06W	LT6**P7**24V21-09W
	LT2**PX**12V21-06W	LT2**PX**24V21-06W	LT4**PX**24V21-06W	LT6**PX**24V21-09W
	—	LT3**PD**24V21-04W	LT4**PD**24V21-05W	LT6**PD**24V21-07W
	—	—	—	LT6**PF**24V21-**Color**09W

	300 lm./ft. Standard Output Tunable-White Fixtures (12V)	300 lm./ft. Standard Output Tunable-White Fixtures (24V)	400 lm./ft. High Output Tunable-White Fixtures (24V)	600 lm./ft. Higher Output Tunable-White Fixtures (24V)
24” Cabinets Standard Output (12V & 24V) Tunable-White Fixture Length P3, P7, & PX Profiles: 20-3/8” PD Profile: 21-9/16” High & Higher Output Tunable-White Fixture Length P3, P7, PF, & PX Profiles: 20-7/16” PD Profiles: 21-3/4”	LT2**P3**12V24-06W	LT2**P3**24V24-06W	LT4**P3**24V24-07W	LT6**P3**24V24-10W
	LT2**P7**12V24-06W	LT2**P7**24V24-06W	LT4**P7**24V24-07W	LT6**P7**24V24-10W
	LT2**PX**12V24-06W	LT2**PX**24V24-06W	LT4**PX**24V24-07W	LT6**PX**24V24-10W
	—	LT3**PD**24V24-06W	LT4**PD**24V24-06W	LT6**PD**24V24-09W
	—	—	—	LT6**PF**24V24-**Color**10W

	300 lm./ft. Standard Output Tunable-White Fixtures (12V)	300 lm./ft. Standard Output Tunable-White Fixtures (24V)	400 lm./ft. High Output Tunable-White Fixtures (24V)	600 lm./ft. Higher Output Tunable-White Fixtures (24V)
27” Cabinets Standard Output (12V & 24V) Tunable-White Fixture Length P3, P7, & PX Profiles: 22-9/16” PD Profile: 23-3/4” High & Higher Output Tunable-White Fixture Length P3, P7, PF, & PX Profiles: 22-7/8” PD Profiles: 24-1/4”	LT2**P3**12V27-07W	LT2**P3**24V27-07W	LT4**P3**24V27-08W	LT6**P3**24V27-11W
	LT2**P7**12V27-07W	LT2**P7**24V27-07W	LT4**P7**24V27-08W	LT6**P7**24V27-11W
	LT2**PX**12V27-07W	LT2**PX**24V27-07W	LT4**PX**24V27-08W	LT6**PX**24V27-11W
	—	LT3**PD**24V27-06W	LT4**PD**24V27-07W	LT6**PD**24V27-10W
	—	—	—	LT6**PF**24V27-**Color**11W

	300 lm./ft. Standard Output Tunable-White Fixtures (12V)	300 lm./ft. Standard Output Tunable-White Fixtures (24V)	400 lm./ft. High Output Tunable-White Fixtures (24V)	600 lm./ft. Higher Output Tunable-White Fixtures (24V)
30” Cabinets Standard Output (12V & 24V) Tunable-White Fixture Length P3, P7, & PX Profiles: 26-15/16” PD Profile: 25-7/8” High & Higher Output Tunable-White Fixture Length P3, P7, & PX Profiles: 25-3/8” PD Profiles: 26-11/16”	LT2**P3**12V30-08W	LT2**P3**24V30-08W	LT4**P3**24V30-09W	LT6**P3**24V30-13W
	LT2**P7**12V30-08W	LT2**P7**24V30-08W	LT4**P7**24V30-09W	LT6**P7**24V30-13W
	LT2**PX**12V30-08W	LT2**PX**24V30-08W	LT4**PX**24V30-09W	LT6**PX**24V30-13W
	—	LT3**PD**24V30-07W	LT4**PD**24V30-08W	LT6**PD**24V30-11W
	—	—	—	LT6**PF**24V30-**Color**13W

	300 lm./ft. Standard Output Tunable-White Fixtures (12V)	300 lm./ft. Standard Output Tunable-White Fixtures (24V)	400 lm./ft. High Output Tunable-White Fixtures (24V)	600 lm./ft. Higher Output Tunable-White Fixtures (24V)
33” Cabinets Standard Output (12V & 24V) Tunable-White Fixture Length P3, P7, & PX Profiles: 29-1/8” PD Profile: 30-1/4” High & Higher Output Tunable-White Fixture Length P3, P7, PF, & PX Profiles: 30-1/4” PD Profiles: 29-1/8”	LT2**P3**12V33-09W	LT2**P3**24V33-09W	LT4**P3**24V33-10W	LT6**P3**24V33-14W
	LT2**P7**12V33-09W	LT2**P7**24V33-09W	LT4**P7**24V33-10W	LT6**P7**24V33-14W
	LT2**PX**12V33-09W	LT2**PX**24V33-09W	LT4**PX**24V33-10W	LT6**PX**24V33-14W
	—	LT3**PD**24V33-08W	LT4**PD**24V33-08W	LT6**PD**24V33-12W
	—	—	—	LT6**PF**24V33-**Color**14W

Cross Reference Guide: Lighting

	300 lm./ft. Standard Output Tunable-White Fixtures (12V)	300 lm./ft. Standard Output Tunable-White Fixtures (24V)	400 lm./ft. High Output Tunable-White Fixtures (24V)	600 lm./ft. Higher Output Tunable-White Fixtures (24V)
36” Cabinets Standard Output (12V & 24V) Tunable-White Fixture Length P3, P7, & PX Profiles: 31-5/16” PD Profile: 32-3/8” High & Higher Output Tunable-White Fixture Length P3, P7, PF, & PX Profiles: 32-3/4” PD Profiles: 34-1/16”	LT2**P3**12V36-09W	LT2**P3**24V36-09W	LT4**P3**24V36-10W	LT6**P3**24V36-15W
	LT2**P7**12V36-09W	LT2**P7**24V36-09W	LT4**P7**24V36-10W	LT6**P7**24V36-15W
	LT2**PX**12V36-09W	LT2**PX**24V36-09W	LT4**PX**24V36-10W	LT6**PX**24V36-15W
	—	LT3**PD**24V36-08W	LT4**PD**24V36-10W	LT6**PD**24V36-14W
	—	—	—	LT6**PF**24V36-**Color**15W

	300 lm./ft. Standard Output Tunable-White Fixtures (12V)	300 lm./ft. Standard Output Tunable-White Fixtures (24V)	400 lm./ft. High Output Tunable-White Fixtures (24V)	600 lm./ft. Higher Output Tunable-White Fixtures (24V)
39” Cabinets Standard Output (12V & 24V) Tunable-White Fixture Length P3, P7, & PX Profiles: 35-11/16” PD Profile: 36-3/4” High & Higher Output Tunable-White Fixture Length P3, P7, PF, & PX Profiles: 35-3/16” PD Profiles: 36-1/2”	LT2**P3**12V39-10W	LT2**P3**24V39-10W	LT4**P3**24V39-12W	LT6**P3**24V39-17W
	LT2**P7**12V39-10W	LT2**P7**24V39-10W	LT4**P7**24V39-12W	LT6**P7**24V39-17W
	LT2**PX**12V39-10W	LT2**PX**24V39-10W	LT4**PX**24V39-12W	LT6**PX**24V39-17W
	—	LT3**PD**24V39-09W	LT4**PD**24V39-11W	LT6**PD**24V39-15W
	—	—	—	LT6**PF**24V39-**Color**17W

	300 lm./ft. Standard Output Tunable-White Fixtures (12V)	300 lm./ft. Standard Output Tunable-White Fixtures (24V)	400 lm./ft. High Output Tunable-White Fixtures (24V)	600 lm./ft. Higher Output Tunable-White Fixtures (24V)
42” Cabinets Standard Output (12V & 24V) Tunable-White Fixture Length P3, P7, & PX Profiles: 37-7/8” PD Profile: 38-7/8” High & Higher Output Tunable-White Fixture Length P3, P7, PF, & PX Profiles: 37-5/8” PD Profiles: 39”	LT2**P3**12V42-11W	LT2**P3**24V42-11W	LT4**P3**24V42-12W	LT6**P3**24V42-18W
	LT2**P7**12V42-11W	LT2**P7**24V42-11W	LT4**P7**24V42-12W	LT6**P7**24V42-18W
	LT2**PX**12V42-11W	LT2**PX**24V42-11W	LT4**PX**24V42-12W	LT6**PX**24V42-18W
	—	LT3**PD**24V42-10W	LT4**PD**24V42-11W	LT6**PD**24V42-17W
	—	—	—	LT6**PF**24V42-**Color**18W

	300 lm./ft. Standard Output Tunable-White Fixtures (12V)	300 lm./ft. Standard Output Tunable-White Fixtures (24V)	400 lm./ft. High Output Tunable-White Fixtures (24V)	600 lm./ft. Higher Output Tunable-White Fixtures (24V)
45” **Cabinet Runs** Standard Output (12V & 24V) Tunable-White Fixture Length P3, P7, & PX Profiles: 40-1/16” PD Profile: 43-1/4” High & Higher Output Tunable-White Fixture Length P3, P7, PF, & PX Profiles: 42-9/16” PD Profiles: 41-7/16”	LT2**P3**12V45-11W	LT2**P3**24V45-11W	LT4**P3**24V45-13W	LT6**P3**24V45-19W
	LT2**P7**12V45-11W	LT2**P7**24V45-11W	LT4**P7**24V45-13W	LT6**P7**24V45-19W
	LT2**PX**12V45-11W	LT2**PX**24V45-11W	LT4**PX**24V45-13W	LT6**PX**24V45-19W
	—	LT3**PD**24V45-11W	LT4**PD**24V45-12W	LT6**PD**24V45-18W
	—	—	—	LT6**PF**24V45-**Color**19W

	300 lm./ft. Standard Output Tunable-White Fixtures (12V)	300 lm./ft. Standard Output Tunable-White Fixtures (24V)	400 lm./ft. High Output Tunable-White Fixtures (24V)	600 lm./ft. Higher Output Tunable-White Fixtures (24V)
48” **Cabinet Runs** Standard Output (12V & 24V) Tunable-White Fixture Length P3, P7, & PX Profiles: 44-7/16” PD Profile: 45-3/8” High & Higher Output Tunable-White Fixture Length P3, P7, PF, & PX Profiles: 45” PD Profiles: 43-15/16”	LT2**P3**12V48-12W	LT2**P3**24V48-12W	LT4**P3**24V48-14W	LT6**P3**24V48-21W
	LT2**P7**12V48-12W	LT2**P7**24V48-12W	LT4**P7**24V48-14W	LT6**P7**24V48-21W
	LT2**PX**12V48-12W	LT2**PX**24V48-12W	LT4**PX**24V48-14W	LT6**PX**24V48-21W
	—	LT3**PD**24V48-12W	LT4**PD**24V48-13W	LT6**PD**24V48-19W
	—	—	—	LT6**PF**24V48-**Color**21W

Cross Reference Guide: Power

Angle Power Strip

The Angle Power Strip products are available in 4 popular color combinations (see below) to help coordinate with the cabinet color, match hardware, or reduce visibility by blending into the backsplash.

The fixtures can be mounted two ways: flush under the cabinet and recessed under the cabinet reveal. See the images below for an example of both methods. The table on the opposite page lists the suggested fixture length needed for each mounting option in a given cabinet size.

Angle Power Strip Example

Bronze Fixture with Black Receptacles

Receptacle Color ↓ Fixture Finish ↓

TR9-1BD-P-BZ

Receptacle Color & Fixture Finish Options:

- Black **(B)** Receptacle with Black **(BK)** Fixture
- Black **(B)** Receptacle with Bronze **(BK)** Fixture
- Grey **(G)** Receptacle with Satin Nickel **(SN)** Fixture
- White **(W)** Receptacle with White **(WT)** Fixture

Flush Mount Under Cabinet

Recessed Mount Under Cabinet

	Flush Mount Under Cabinet	Recessed Mount Under Cabinet
9” Cabinets	APT9-2**Color**-P-**Finish-Position**	N/A
	TR9-1**Color**D-P-**Finish**	N/A
	TRS9-1**Color-Finish**	N/A

	Flush Mount Under Cabinet	Recessed Mount Under Cabinet
12” Cabinets	APT12-2**Color**-P-**Finish-Position**	APT9-2**Color**-P-**Finish-Position**
	TR12-1**Color**D-P-**Finish**	TR9-1**Color**D-P-**Finish**
	TRS12-1**Color-Finish**	TRS9-1**Color-Finish**

	Flush Mount Under Cabinet	Recessed Mount Under Cabinet
15” Cabinets	APT12-2**Color**-P-**Finish-Position**	APT12-2**Color**-P-**Finish-Position**
	TR12-1**Color**D-P-**Finish**	TR12-1**Color**D-P-**Finish**
	TRS12-1**Color-Finish**	TRS12-1**Color-Finish**

	Flush Mount Under Cabinet	Recessed Mount Under Cabinet
18” Cabinets	APT18-3**Color**-P-**Finish-Position**	APT12-2**Color**-P-**Finish-Position**
	APTU**Location**18-2**ColorFinish**	N/A
	TR18-2**Color**D-P-**Finish**	TR12-1**Color**D-P-**Finish**
	TRS18-2**Color-Finish-Switch**	TRS12-1**Color-Finish**

Cross Reference Guide: Power

	Flush Mount Under Cabinet	Recessed Mount Under Cabinet
21” Cabinets	APT18-3Color-P-Finish-Position	APT18-3Color-P-Finish-Position
	APTULocation18-2ColorFinish	APTULocation18-2ColorFinish
	TR18-2ColorD-P-Finish	TR18-2ColorD-P-Finish
	TRS18-2Color-Finish-Switch	TRS18-2Color-Finish-Switch

	Flush Mount Under Cabinet	Recessed Mount Under Cabinet
24” Cabinets	APT24-4Color-P-Finish	APT18-3Color-P-Finish-Position
	APTULocation24-4ColorFinish	APTULocation18-2ColorFinish
	TR24-2ColorD-P-Finish	TR18-2ColorD-P-Finish
	TRS24-3Color-Finish-Switch	TRS18-2Color-Finish-Switch

	Flush Mount Under Cabinet	Recessed Mount Under Cabinet
27” Cabinets	APT24-4Color-P-Finish	APT24-4Color-P-Finish
	APTULocation24-4ColorFinish	APTULocation24-4ColorFinish
	TR24-2ColorD-P-Finish	TR24-2ColorD-P-Finish
	TRS24-3Color-Finish-Switch	TRS24-3Color-Finish-Switch

	Flush Mount Under Cabinet	Recessed Mount Under Cabinet
30” Cabinets	APT30-4Color-P-Finish	APT24-4Color-P-Finish
	APTULocation30-5ColorFinish	APTULocation24-4ColorFinish
	TR30-2ColorD-P-Finish	TR24-2ColorD-P-Finish
	TRS30-3Color-Finish-Switch	TRS24-3Color-Finish-Switch

	Flush Mount Under Cabinet	Recessed Mount Under Cabinet
33” Cabinets	APT30-4Color-P-Finish	APT30-4Color-P-Finish
	APTULocation30-5ColorFinish	APTULocation30-5ColorFinish
	TR30-2ColorD-P-Finish	TR30-2ColorD-P-Finish
	TRS30-3Color-Finish-Switch	TRS30-3Color-Finish-Switch

	Flush Mount Under Cabinet	Recessed Mount Under Cabinet
36” Cabinets	APT36-4Color-P-Finish	APT30-4Color-P-Finish
	APTULocation36-6ColorFinish	APTULocation30-5ColorFinish
	TR36-2ColorD-P-Finish	TR30-2ColorD-P-Finish
	TRS36-3Color-Finish-Switch	TRS30-3Color-Finish-Switch

	Flush Mount Under Cabinet	Recessed Mount Under Cabinet
39” Cabinets	APT36-4Color-P-Finish	APT36-4Color-P-Finish
	APTULocation36-6ColorFinish	APTULocation36-6ColorFinish
	TR36-2ColorD-P-Finish	TR36-2ColorD-P-Finish
	TRS36-3Color-Finish-Switch	TRS36-3Color-Finish-Switch

	Flush Mount Under Cabinet	Recessed Mount Under Cabinet
42” Cabinets	APT42-5Color-P-Finish	APT36-4Color-P-Finish
	APTULocation42-6ColorFinish	APTULocation36-6ColorFinish
	TR42-3ColorD-P-Finish	TR36-2ColorD-P-Finish

	Flush Mount Under Cabinet	Recessed Mount Under Cabinet
45” Cabinets	APT42-5Color-P-Finish	APT42-5Color-P-Finish
	APTULocation42-6ColorFinish	APTULocation42-6ColorFinish
	TR42-3ColorD-P-Finish	TR42-3ColorD-P-Finish

	Flush Mount Under Cabinet	Recessed Mount Under Cabinet
48” Cabinets	APT48-5Color-P-Finish	APT42-5Color-P-Finish
	APTULocation48-6ColorFinish	APTULocation42-6ColorFinish
	TR48-3ColorD-P-Finish	TR42-2ColorD-P-Finish

Cabinet Care & Cleaning

- In order to maintain and protect the original beauty of the cabinets, clean at least once a month by gently wiping the surface of the cabinets with a soft, clean, damp cloth. Allow the cabinets to air dry.
- Do NOT use kitchen cloths or sponges that have abrasive surfaces, detergent or grease on them.
- Use common dishwashing liquids (not detergents) to remove grease or soil. Wipe clean with a damp cloth. Dry the cabinet thoroughly.
- Under routine kitchen use, the cabinets around the sink, range, oven, baseboards and dishwasher may become damp with splashes from water or spills. It's important to immediately dry the excess moisture to prevent damage to the finish of the cabinetry.
- Never use cleaners containing bleach, ammonia or abrasives on your cabinetry. These substances will damage the cabinet finish.
- Touch up scratches and dings on cabinetry with a touch-up marker.
- In the event that scratches and dings are still visible after using a touch-up marker, use a filler pencil. Fill in the scratch by rubbing the pencil over the scratched area and wiping away the excess with a soft, clean cloth.
- Do NOT use sandpaper or any other type of abrasive paper or material in attempt to even out a scratch. These abrasives will damage the finish on the cabinet.

NorthPoint Cabinetry Dealer Online Sales Policy

Hardware Resources actively supports the advertising and promotion of its NorthPoint Cabinetry products by authorized NorthPoint Cabinetry dealers. However, Hardware Resources has determined that the NorthPoint Cabinetry brand will not be sold online. This policy defines how NorthPoint Cabinetry can be displayed online with the intention of promoting sales and driving traffic in-store.

Upon request, Hardware Resources will provide authorized dealers a media package including logos, images, digital catalogs and brochures, and marketing copy that may be used to advertise and promote NorthPoint Cabinetry online. These assets will be provided only after the dealer signs the Image License Agreement Form.

What is allowed:

1. Use of the NorthPoint logo
2. Use of approved marketing copy provided by Hardware Resources
3. Use of approved digital assets provided by Hardware Resources
4. Links for download of the NorthPoint Cabinetry Homeowner Selection Guide, Catalog, Vanity Catalog, and Specification Book
5. Links to NorthPoint social media pages (Instagram, Facebook, YouTube, Vimeo)
6. Informational landing pages on the dealer's website

What is not allowed:

1. No online retail sales
2. No pricing is to be shown online
3. Individual SKU images cannot be shown online
4. Product drawings cannot be shown online
5. The NorthPoint Price Book and Overview Brochure PDF cannot be shown online

White labeling/private labeling of the product is allowed; however, the use of all NorthPoint Cabinetry digital assets and product identifiers (brand name, part number, collection names and finish names) must be replaced with the dealer's own digital assets and product identifiers at their own cost. Hardware Resources will not drop ship cabinetry outside of the dealer's geographic area (100 miles from the dealer's location).

Hardware Resources is committed to proactively finding and dealing with any violators of the above policy. Policy violations will result in account suspensions and customer terminations.

For questions, please contact your Hardware Resources sales representative.

Warranty for Finished Cabinetry

Premier Collection

Hardware Resources warrants to the original consumer purchaser that our Premier Cabinetry will be free from unnatural defects in material and workmanship under normal use and proper care for the period of FIVE (5) YEARS from the date of original purchase. This Limited Warranty applies only to the Original Purchaser and is not transferable to any other party.

WARRANTY COVERAGE

Limited 5-Year Warranty on Cabinets to the original purchasing consumer from the date of original purchase that the cabinets will be free from defects in material and workmanship under normal use and proper care. Limited Lifetime Warranty on Drawer Slides and Hinges to the original purchasing consumer as long as they own the product. We warrant that the drawer slides and hinges shall be free from defects in material and workmanship under normal use.

Essentials Collection

Hardware Resources warrants to the original consumer purchaser that our Essentials Cabinetry will be free from unnatural defects in material and workmanship under normal use and proper care for the period of ONE (1) YEAR from the date of original purchase. This Limited Warranty applies only to the Original Purchaser and is not transferable to any other party.

WARRANTY COVERAGE

Limited 1-Year Warranty on Cabinets and on Drawer Slides to the original purchasing consumer from the date of original purchase that the cabinets will be free from defects in material and workmanship under normal use and proper care. Limited Lifetime Warranty on Hinges to the original purchasing consumer as long as they own the product. We warrant that the drawer slides and hinges shall be free from defects in material and workmanship under normal use.

WARRANTY LIMITATIONS AND EXCLUSIONS

This warranty does not apply to any damage that has occurred due to normal wear, accident, misuse, or improper handling of the cabinetry. Cabinetry that is stored or placed in excessive moisture or extreme temperatures will not be covered under this warranty. This warranty does not apply to cabinetry that has been altered, modified or improperly installed to industry standard. Premier Cabinetry is constructed from solid wood and wood veneers on plywood. Wood characteristics that naturally occur, such as variations in color, grain, mineral streaks and knots are not considered material defects. Color variations and color softening in cabinets are a natural occurrence due to species, age, character of cabinets as well as exposure to UV light, sunlight, smoke, household cleaners, and other environmental conditions. For these reasons, replacement cabinets and/or accessories may not match the existing cabinets and such variations are not deemed a material defect under this warranty.

WARRANTY PERFORMANCE

In the event a manufacturing defect occurs within the limited liability warranty period and coverage, Hardware Resources, Inc. will replace the damaged component with a comparable component that is either equal to or greater in value than the original component at no charge. This warranty is limited to the replacement of defective components only and does not include service, labor, or transportation charges related to the removal or installation of the defective or replacement components. This warranty does not apply to any products used in conjunction with the cabinetry, such as counter tops, appliances, or plumbing fixtures. Hardware Resources will ship the replacement cabinet, component or part thereof to the original consumer purchaser via ground shipper or freight carrier, at Hardware Resources sole discretion. Such replacement is contingent upon the current product offerings with the Premier Cabinetry line at time of warranty claim. If the affected product is no longer available, Hardware Resources reserves the right to replace the affected component with a new component of the same style and/or uniform appearance. Hardware Resources makes no guarantee that replacement cabinets or parts thereof will exactly match the finish or appearance of the remaining components. Replaced product shall be warrantied for a period equal to the remainder of the original Limited Warranty on the original product or for NINETY (90) days, whichever is longer.

CLAIMS

All claims must be submitted in writing and must specify the defects present in the cabinets and accessories. To initiate a claim for defective cabinets and/or accessories contact your builder, dealer, distributor or contractor who installed and sold the product. If that party is unknown or you have difficulty obtaining assistance, contact: Hardware Resources, Inc. Customer Service Dept., 4319 Marlena Street, Bossier City, LA 71111.

WARRANTY DISCLAIMER

THIS WRITING IS THE COMPLETE AND EXCLUSIVE REMEDY FOR ANY ORIGINAL CONSUMER PURCHASER FOR BREACH OF WARRANTY. THE STATEMENT OF THE EXPRESS WARRANTIES PROVIDED HEREIN IS IN LIEU OF ANY AND ALL OTHER EXPRESS AND/OR STATUTORY WARRANTIES, TO THE EXTENT PROVIDED BY LAW. IN NO EVENT SHALL HARDWARE RESOURCES BE LIABLE FOR INCIDENTAL OR CONSEQUENTIAL DAMAGES TO ANY ORIGINAL CONSUMER PURCHASER OR A THIRD PARTY, INCLUDING BUT NOT LIMITED TO DAMAGES ARISING FROM PERSONAL INJURY, LOST PROFITS, LOSS OF BUSINESS OPPORTUNITIES, LOSS OF PROPERTY, ECONOMIC LOSS, STATUTORY OR EXEMPLARY DAMAGES, WHETHER FROM NEGLIGENCE, WARRANTY, STRICT LIABILITY OR OTHERWISE. ANY AND ALL OTHER WARRANTIES, EXPRESS OR IMPLIED, ARE EXCLUDED AND DISCLAIMED, EXCEPTING ONLY THOSE EXPRESS WARRANTIES SPECIFICALLY SET FORTH IN THIS LIMITED LIABILITY WARRANTY. IN NO EVENT SHALL HARDWARE RESOURCES BE LIABLE FOR ANY INDIRECT DAMAGES RESULTING FROM INSTALLATION, USE OR FAILURE OF ITS PRODUCTS. THIS LIMITED LIABILITY WARRANTY IS HARDWARE RESOURCES SOLE WARRANTY, AND NO DEALER, DISTRIBUTOR OR AGENT POSSESSES ANY AUTHORITY WHATSOEVER TO MODIFY OR ENLARGE THIS WARRANTY IN ANY WAY.

Warranty for Unfinished Cabinetry

Hardware Resources, Inc. ("**we**") warrants to the original owner or owners of the building in which the NorthPoint cabinetry product was first installed (the "**Owner**") that the Product will be free from defects in materials and workmanship during the Warranty Period, as set forth in further detail below.

PREMIER COLLECTION FIVE YEAR LIMITED WARRANTY (THE "**PC WARRANTY**")

We warrant to the Owner that each product in our Premier Collection cabinetry line, excluding the product's drawer slides and hinges (the "**PC Product**"), will be free from unnatural defects in material and workmanship under normal use and proper care for a period the shorter of: (i) FIVE (5) YEARS from the date of original purchase, or (ii) the date the Owner transfers the PC Product to another person or entity (the "**PC Warranty Period**").

ESSENTIALS COLLECTION ONE YEAR LIMITED WARRANTY (THE "**EC WARRANTY**")

We warrant to the Owner that each product in our Essentials Collection cabinetry line, excluding the product's drawer slides and hinges (the "**EC Product**"), will be free from unnatural defects in material and workmanship under normal use and proper care for a period the shorter of: (i) ONE (1) YEAR from the date of original purchase, or (ii) the date the Owner transfers the EC Product to another person or entity (the "**EC Warranty Period**").

DRAWER SLIDES AND HINGES LIMITED LIFETIME WARRANTY (THE "**HARDWARE WARRANTY**"; WITH THE PC WARRANTY AND THE EC WARRANTY, EACH A "**WARRANTY**" AND TOGETHER, THE "**WARRANTIES**")

We warrant to the Owner that the drawer slides and hinges components of each product in our Premier Collection and Essentials Collection cabinetry lines (the "**Hardware Product**"; together with the PC Product and the EC Product, the "**Products**") will be free from unnatural defects in material and workmanship under normal use and proper care for a period the shorter of: (i) the lifetime of the Owner, or (ii) the date the Owner transfers the Hardware Product to another person or entity (the "**Hardware Product Warranty Period**").

TRANSFERABILITY

Only the Owner is entitled to coverage under the Warranties. The Warranties are non-transferable to any subsequent owner or transferee of the Products.

WARRANTIES LIMITATIONS AND EXCLUSIONS

The Warranties do not cover damage to Products that occurs due to normal wear and tear, transportation, storage, failure to follow instructions, alterations, modifications, unauthorized or improper repair, accidents, abuse, misuse, improper handling, improper cleaning, outdoor use, installation not in conformance with our instructions or applicable building codes or industry standards, or other actions or events beyond our control. Products that are stored or installed in environments where excessive moisture or extreme temperatures are present will not be covered under the Warranties.

Stained and Unfinished Products

Certain Products covered by the Warranties are stained or unfinished (as opposed to painted) and constructed from solid wood and wood veneers on plywood. Concerning these Products, wood characteristics that naturally occur, such as variations in color, grain, mineral streaks and knots are not considered defects under the Warranties. Color variations and color softening in cabinets are a natural occurrence due to species, age, character of cabinets as well as exposure to UV light, sunlight, smoke, household cleaners, and other environmental conditions. For these reasons, replacement Products and/or accessories may not match the existing Products, and such variations are not defects under the Warranties.

Any changes to the Products resulting from stains, paints, sealers, or other finishes applied by any person other than Hardware Resources, Inc., as well as any damage occurring during the finishing process, are not covered under the Warranties. The responsibility for properly applying stains, paints, or other finishes rests solely with the Owner. For these reasons, replacement Products and/or accessories may not match the existing cabinets, and such variations are not deemed a material defect under this warranty.

WARRANTY PERFORMANCE

Should you discover a Product manufacturing defect within the applicable Warranty Period and successfully make a claim under the applicable Warranty, we will replace the defective Product or Product component with a comparable Product or component that is either equal to or greater in value than the original Product or component free of charge. Coverage under a Warranty is limited to the replacement of defective Product components only. Service, labor, or transportation costs related to the removal or installation of the defective or replacement Product or components are not covered. The Warranties do not apply to any products used or installed in conjunction with the Products, such as countertops, appliances, or plumbing fixtures.

We will ship any replacement Product or component thereof to the Owner using a shipment method of our choice. Such replacement is contingent upon the then-current product offerings available within the applicable cabinetry product line at the time of the Warranty claim. If the original Product or component is no longer available, we reserve the right to replace the defective Product or component with a new product or component of the same or similar style and/or appearance.

We make no guarantee that replacement cabinets or components thereof will exactly match the finish or appearance of the remaining Products or components. Any replacement Product provided pursuant to a successful Warranty claim shall be covered under the applicable Warranty for a period equal to the remainder of the original Warranty Period or for NINETY (90) days, whichever is longer.

Warranty for Unfinished Cabinetry

CLAIMS

All claims must be submitted in writing during the applicable Warranty Period and must specify in detail the defects present in the Product. To initiate a Warranty claim, contact your builder, dealer, distributor or contractor who sold and/or installed the Product. If that party is unknown or you have difficulty obtaining assistance, contact: Hardware Resources, Inc. Customer Service Dept., 4319 Marlena Street, Bossier City, LA 71111.You can also reach Customer Service by phone at 800-463-0660.

You must be able to provide sufficient proof of the Product's alleged defects (such as samples and/or a number of clear photographs for us to be able to evaluate the claim). If we require a sample of the defective Product, you must pay for shipping and handling to our address. We reserve the right to inspect the allegedly defective Product at the site of installation. You must be able to provide a detailed receipt for the Product. We have the sole right to determine whether a Warranty claim filed is valid.

WARRANTY DISCLAIMER

THE STATEMENTS OF WARRANTY WITHIN THESE WARRANTIES SET FORTH THE ONLY EXPRESS WARRANTIES EXTENDED BY HARDWARE RESOURCES, INC. FOR ITS NORTHPOINT CABINETRY PRODUCTS, AND THE PROVISIONS OF THESE WARRANTIES SHALL CONSTITUTE THE ENTIRE LIABILITY OF HARDWARE RESOURCES, INC. AND THE OWNER'S EXCLUSIVE REMEDY FOR BREACH OF THESE WARRANTIES. NO OTHER WARRANTY, MADE BY HARDWARE RESOURCES, INC. OR ITS AGENTS, DEALERS, OR DISTRIBUTORS, WRITTEN OR OTHERWISE COMMUNICATED, WHICH IS NOT CONTAINED OR AUTHORIZED HEREIN, WILL BE RECOGNIZED BY HARDWARE RESOURCES, INC.

LIMITATION OF LIABILITY AND CHOICE OF LAW

THE REMEDIES DESCRIBED ABOVE ARE YOUR SOLE AND EXCLUSIVE REMEDIES AND OUR ENTIRE LIABILITY FOR ANY BREACH OF AN APPLICABLE WARRANTY. OUR LIABILITY SHALL UNDER NO CIRCUMSTANCES EXCEED THE ACTUAL AMOUNT PAID BY YOU FOR THE DEFECTIVE PRODUCT, NOR SHALL WE UNDER ANY CIRCUMSTANCES BE LIABLE FOR ANY CONSEQUENTIAL, INCIDENTAL, SPECIAL OR PUNITIVE DAMAGES OR LOSSES, WHETHER DIRECT OR INDIRECT.

Some states do not allow the exclusion or limitation of incidental or consequential damages, so the above limitation or exclusion may not apply to you.

The Warranties give you specific legal rights and you may also have other rights, which vary from state to state.

WE LIMIT THE DURATION AND REMEDIES OF ALL IMPLIED WARRANTIES, INCLUDING WITHOUT LIMITATION THE WARRANTIES OF MERCHANTABILITY AND FITNESS FOR A PARTICULAR PURPOSE TO THE DURATION OF THE APPLICABLE WARRANTY HEREIN.

Some states do not allow limitations on how long an implied warranty lasts, so the above limitation may not apply to you.

The Warranties shall be governed and construed in accordance with the laws of the State of Texas, without regard to its conflict of laws. Any legal action concerning the Warranties shall be litigated in the courts of the State of Texas, to which you agree to submit to personal jurisdiction.

Index

B12 ... 35, 36, 87
B15 ... 35, 36, 87
B18 ... 35, 36, 87
B21 ... 35, 36, 87
B24 ... 35, 36, 87
B27 ... 35, 36, 87
B30 ... 35, 36, 87
B33 ... 35, 36, 87
B36 ... 35, 36, 87
B39 ... 35, 36, 87
B42 ... 35, 36, 87
BBC39-42U ... 41, 42, 89
BBC42-45U ... 41, 42, 89
BBC45-48U ... 41, 42, 89
BC33U ... 40, 89
BC36U ... 40, 89
BDEP24 ... 71, 97
BEP24 ... 72, 99
BF3 ... 74, 101
BF6 ... 74, 101
BFH09 ... 34, 87
BFH09NB ... 70, 97
BFH12 ... 34, 87
BFH12NB ... 70, 97
BFH15 ... 34, 87
BFH15NB ... 70, 97
BFH18 ... 34, 87
BFH18NB ... 70, 97
BM8 ... 75, 102
BUNFOOT ... 79, 105
BX-SAM-MLD-SL ... 108
CAB-DOORKIT-V1 ... 108
CAB-SAM-BAG ... 108
CAB-SWATCHKIT ... 108
CM8 ... 76, 102
CMA8 ... 76, 102
CMC8 ... 76, 102
CMV8 ... 76, 102
CORBEL-B ... 80, 105
CORBEL-LS ... 80, 105
CORBEL-S ... 80, 105
DB12-3 ... 44, 88
DB15-3 ... 44, 88
DB18-3 ... 44, 88
DB21-3 ... 44, 88
DB24-3 ... 44, 88
DB30-2 ... 43, 87
DB30-3 ... 44, 88
DB36-2 ... 43, 87
DB36-3 ... 44, 88
DECOLEG ... 78, 105
DM8 ... 75, 102
DWEP1.5 ... 73, 100
DWEP3 ... 73, 100
DWEP6 ... 73, 100
F330 ... 74, 100
F342 ... 74, 100
F396 ... 74, 100
F630 ... 74, 100
F642 ... 74, 100
F696 ... 74, 100
FB8 ... 76, 104
FF330 ... 74, 100
FF336 ... 74, 100
FF342 ... 74, 100
FF396 ... 74, 100
FO330 ... 74, 101
FO336 ... 74, 101
FO342 ... 74, 101
FO396 ... 74, 101
FO630 ... 74, 101
FO636 ... 74, 101
FO642 ... 74, 101
HBUNFOOT ... 79, 105
HTFOOT ... 79, 105
ICM8 ... 75, 102
KD30 ... 67, 92
LRB8 ... 75, 103
LRD8 ... 75, 103
LRS8 ... 75, 103
MWB30 ... 52, 92
MWC3018 ... 53, 92
MWC3036 ... 53, 92
NPC-AERO ... 107
NPCDIS-SC ... 108
NPCDIS-WMD ... 108
OCM8 ... 75, 103
OCM8-135 ... 75, 103
ORG36 ... 67, 96
OVD33D ... 49, 91
OVD33P ... 51, 91
OVD3384 ... 50, 51, 91
OVD3384U ... 47, 48, 91
OVD3390 ... 50, 51, 91
OVD3390U ... 47, 48, 91
OVD3396 ... 50, 51, 91
OVD3396U ... 47, 48, 91
PBBH4896 ... 69, 98
PH3696 ... 70, 98
PR3015 ... 68, 96
PV3648 ... 70, 98
PV4896 ... 70, 98
QR8 ... 75, 103
REP24-1.5 ... 73, 99
REP24-.75 ... 73, 99
REP30-1.5 ... 73, 99
REP30-.75 ... 73, 99
RF-SWKIT-CARDS ... 108
RF-SWKIT-ESP ... 108
RF-SWKIT-NG ... 108
RF-SWKIT-PGRY ... 108
RF-SWKIT-PWH ... 108
RF-SWKIT-SD ... 108
RF-SWKIT-SG ... 108
RF-SWKIT-SL ... 108
RF-SWKIT-SW ... 108
RF-SWKIT-UF ... 108
RHAR36 ... 66, 96
RHCL36 ... 66, 96
RM8 ... 75, 103
ROT15 ... 81, 106
ROT18 ... 81, 106
ROT21 ... 81, 106
ROT24 ... 81, 106
ROT27 ... 81, 106
ROT30 ... 81, 106
ROT33 ... 81, 106
ROT36 ... 81, 106
RTA-MLS28 ... 81, 106
RTA-PLS28 ... 81, 106
RTA-WLS28 ... 81, 106
SAMB15 ... 107
SAMD ... 107
SAMMB ... 107
SB30 ... 37, 88
SB33 ... 37, 88
SB36 ... 37, 88
SB39 ... 37, 88
SBF36 ... 38, 88
SBF39 ... 38, 88
SCM8 ... 75, 103
SDECOLEG ... 78, 105
SFCD42 ... 39, 88
SHM8 ... 75, 104
TEP96 ... 72, 99
TFOOT ... 79, 105
TKC8 ... 76, 104
TUKITS ... 107
TUPEN ... 107
TUPSTICK ... 107
UP1884 ... 45, 46, 90
UP1890 ... 45, 46, 90
UP1896 ... 45, 46, 90
UP2484 ... 45, 46, 90
UP2490 ... 45, 46, 90
UP2496 ... 45, 46, 90
UP3084 ... 45, 46, 90
UP3090 ... 45, 46, 90
UP3096 ... 45, 46, 90
VAR36 ... 68, 96
VAR48 ... 68, 96
VB12 ... 55, 93
VB15 ... 55, 93
VB18 ... 55, 93
VBTD36 ... 61, 94
VBTD42 ... 61, 94
VBTD48 ... 61, 94
VCDB60-3 ... 62, 63, 94
VCDB60-6 ... 62, 63, 94
VDB12-3 ... 60, 94
VDB15-3 ... 60, 94
VDB18-3 ... 60, 94
VDB21-3 ... 60, 94
VFH12 ... 54, 93
VL1584 ... 64, 65, 95
VL1884 ... 64, 65, 95
VL2484 ... 64, 65, 95
VSB24 ... 56, 57, 93
VSB27 ... 56, 57, 93
VSB30 ... 56, 57, 93
VSB33 ... 56, 57, 93
VSB36 ... 56, 57, 93
VSB42 ... 56, 57, 93
VSB48 ... 56, 57, 93
VSC48 ... 69, 96
VSDB30L ... 58, 59, 93
VSDB30R ... 58, 59, 93
VSDB36L ... 58, 59, 93
VSDB36R ... 58, 59, 93
VTRIMKIT ... 105
VTRIMKIT-ESP ... 81
VTRIMKIT-PGRY ... 81
VTRIMKIT-PWH ... 81
VTRIMKIT-SD ... 81
VTRIMKIT-SL ... 81
VTRIMKIT-SW ... 81
W0930 ... 22, 83
W0936 ... 24, 84
W0942 ... 26, 84
W1230 ... 22, 83
W1236 ... 24, 84
W1242 ... 26, 84
W1530 ... 22, 83
W1530MI ... 23, 85
W1536 ... 24, 84
W1536MI ... 25, 86
W1542 ... 26, 84
W1542MI ... 27, 86
W1830 ... 22, 83
W1830MI ... 23, 85
W1836 ... 24, 84
W1836MI ... 25, 86
W1842 ... 26, 84
W1842MI ... 27, 86
W2118 ... 19, 82
W2130 ... 22, 83
W2136 ... 24, 84
W2142 ... 26, 84
W2418 ... 19, 82
W2430 ... 22, 83
W2436 ... 24, 84
W2442 ... 26, 84
W2730 ... 22, 83
W2736 ... 24, 84
W2742 ... 26, 84
W3012 ... 17, 82
W3015 ... 18, 82
W3018 ... 19, 82
W3024 ... 20, 82
W3030 ... 22, 83
W3030MI ... 23, 85
W3036 ... 24, 84
W3036MI ... 25, 86
W3042 ... 26, 84
W3042MI ... 27, 86
W3312 ... 17, 82
W3315 ... 18, 82
W3318 ... 19, 82
W3324 ... 20, 82
W3330 ... 22, 83
W3336 ... 24, 84
W3342 ... 26, 84
W3612 ... 17, 82
W3615 ... 18, 82
W3618 ... 19, 82
W3624 ... 20, 82
W3630 ... 22, 83
W3630MI ... 23, 85
W3636 ... 24, 84
W3636MI ... 25, 86
W3642 ... 26, 84
W3642MI ... 27, 86
W3912 ... 17, 82
W3915 ... 18, 82
W3918 ... 19, 82
W3924 ... 20, 82
W3930 ... 22, 83
W3936 ... 24, 84
W3942 ... 26, 84
W4230 ... 22, 83
W4236 ... 24, 84
W4242 ... 26, 84
W361824 ... 21, 83
W362424 ... 21, 83
W391824 ... 21, 83
W392424 ... 21, 83
WBC30-3330U ... 29, 85
WBC30-3336U ... 29, 85
WBC30-3342U ... 29, 85
WDC2430 ... 31, 85
WDC2430MI ... 33, 86
WDC2436 ... 31, 85
WDC2436MI ... 33, 86
WDC2442 ... 31, 85
WDC2442MI ... 33, 86
WDC273615 ... 32, 85
WDC273615MI ... 33, 86
WDC274215 ... 32, 85
WDC274215MI ... 33, 86
WDEP1230 ... 71, 97
WDEP1236 ... 71, 97
WDEP1242 ... 71, 97
WEC1230 ... 28, 85
WEC1236 ... 28, 85

Index

WEC1242 28, 85
WEP1242 72, 98
WEP1542 72, 98
WR3015 68, 96
XB12 87
XB15 87
XB18 87
XB21 87
XB24 87
XB27 87
XB30 87
XB33 87
XB36 87
XB39 87
XB42 87
XBBC39-42U 89
XBBC42-45U 89
XBBC45-48U 89
XBC33-MLS28 89
XBC33-PLS28 89
XBC33U 89
XBC33-WLS28 89
XBC36-MLS28 89
XBC36-PLS28 89
XBC36U 89
XBC36-WLS28 89
XBDEP24 97
XBEP24 99
XBF3 101
XBF6 101
XBFH09 87
XBFH09NB 97
XBFH12 87
XBFH12NB 97
XBFH15 87
XBFH15NB 97
XBFH18 87
XBFH18NB 97
XBM8 102
XBUNFOOT 105
XCM8 102
XCMA8 102
XCMC8 102
XCMV8 102
XCORBEL-B 105
XCORBEL-LS 105
XCORBEL-S 105
XDB12-3 88
XDB15-3 88
XDB18-3 88
XDB21-3 88
XDB24-3 88
XDB30-2 87
XDB30-3 88
XDB36-2 87
XDB36-3 88
XDECOLEG 105
XDM8 102
XDWEP1.5 100
XDWEP3 100
XDWEP6 100
XF330 100
XF342 100
XF396 100
XF630 100
XF642 100
XF696 100
XFB8 104
XFF330 100
XFF336 100
XFF342 100
XFF396 100
XFO330 101
XFO336 101
XFO342 101
XFO396 101
XFO630 101
XFO636 101
XFO642 101
XHBUNFOOT 105
XHTFOOT 105
XICM8 102
XKD30 92
XLRB8 103
XLRD8 103
XLRS8 103
XMWB30 92
XMWC3018 92
XMWC3036 92
XNPC-AERO 107
XOCM8 103
XOCM8-135 103
XORG36 96
XOVD33D 91
XOVD33P 91
XOVD3384 91
XOVD3384U 91
XOVD3390 91
XOVD3390U 91
XOVD3396 91
XOVD3396U 91
XPBBH4896 98
XPH3696 98
XPR3015 96
XPV3648 98
XPV4896 98
XQR8 103
XREP24-1.5 99
XREP24-.75 99
XREP30-1.5 99
XREP30-.75 99
XRHAR36 96
XRHCL36 96
XRM8 103
XROT15 106
XROT18 106
XROT21 106
XROT24 106
XROT27 106
XROT30 106
XROT33 106
XROT36 106
XRTA-MLS28 106
XRTA-PLS28 106
XRTA-WLS28 106
XSAMB15 107
XSAMD 107
XSAMMB 107
XSB30 88
XSB33 88
XSB36 88
XSB39 88
XSBF36 88
XSBF39 88
XSCM8 103
XSDECOLEG 105
XSFCD42 88
XSHM8 104
XTEP96 99
XTFOOT 105
XTKC8 104
XTUKITS 107
XTUPEN 107
XTUPSTICK 107
XUP1884 45, 46, 90
XUP1890 45, 46, 90
XUP1896 45, 46, 90
XUP2484 90
XUP2490 90
XUP2496 90
XUP3084 90
XUP3090 90
XUP3096 90
XVAR36 96
XVAR48 96
XVB12 93
XVB15 93
XVB18 93
XVBTD36 94
XVBTD42 94
XVBTD48 94
XVCDB60-3 94
XVCDB60-6 94
XVDB12-3 94
XVDB15-3 94
XVDB18-3 94
XVDB21-3 94
XVFH12 93
XVL1584 64, 65, 95
XVL1884 64, 65, 95
XVL2484 95
XVSB24 93
XVSB27 93
XVSB30 93
XVSB33 93
XVSB36 93
XVSB42 93
XVSB48 93
XVSC48 96
XVSDB30L 93
XVSDB30R 93
XVSDB36L 93
XVSDB36R 93
XVTRIMKIT 105
XW0930 22, 83
XW0936 24, 84
XW0942 26, 84
XW1230 22, 83
XW1236 24, 84
XW1242 26, 84
XW1530 22, 83
XW1530MI 23, 85
XW1536 24, 84
XW1536MI 25, 86
XW1542 26, 84
XW1542MI 27, 86
XW1830 22, 83
XW1830MI 23, 85
XW1836 24, 84
XW1836MI 25, 86
XW1842 26, 84
XW1842MI 27, 86
XW2118 82
XW2130 22, 83
XW2136 24, 84
XW2142 26, 84
XW2418 82
XW2430 83
XW2436 84
XW2442 84
XW2730 83
XW2736 84
XW2742 84
XW3012 82
XW3015 82
XW3018 82
XW3024 82
XW3030 83
XW3030MI 85
XW3036 84
XW3036MI 86
XW3042 84
XW3042MI 86
XW3312 82
XW3315 82
XW3318 82
XW3324 82
XW3330 83
XW3336 84
XW3342 84
XW3612 82
XW3615 82
XW3618 82
XW3624 82
XW3630 83
XW3630MI 85
XW3636 84
XW3636MI 86
XW3642 84
XW3642MI 86
XW3912 82
XW3915 82
XW3918 82
XW3924 82
XW3930 83
XW3936 84
XW3942 84
XW4230 83
XW4236 84
XW4242 84
XW361824 83
XW362424 83
XW391824 83
XW392424 83
XWBC30-30 29, 85
XWBC30-36 29, 85
XWBC30-42 29, 85
XWDC2430 31, 85
XWDC2430MI 33, 86
XWDC2436 31, 85
XWDC2436MI 33, 86
XWDC2442 31, 85
XWDC2442MI 33, 86
XWDC2736MI 86
XWDC2742MI 86
XWDC273615 32, 85
XWDC273615MI 33
XWDC274215 32, 85
XWDC274215MI 33
XWDEP1230 97
XWDEP1236 97
XWDEP1242 97
XWEC1230 28, 85
XWEC1236 28, 85
XWEC1242 28, 85
XWEP1242 98
XWEP1542 98
XWR3015 96

Ordering Made Easy

NorthPoint Cabinetry offers 3 convenient methods for easy order placement.

1. Online: www.NorthPointCabinetry.com
2. Email: Orders@NorthPointCabinetry.com
3. Fax: (318) 742-9513

We recommend placing orders online for faster processing and delivery, and to easily confirm products are in stock.

Order Placement

Place your online order by visiting www.NorthPointCabinetry.com. Login, select the items you wish to order, and simply checkout.

Place an email or fax order by obtaining the cabinet order form or Excel quoting tool by logging in to the website or requesting them from a Customer Service team member or your Sales Representative. Submit the completed order form to the email address or fax number listed above. 2020 and ProKitchen material lists are also accepted as long as NorthPoint Cabinetry's item number nomenclature is used.

For questions about your order, call (800) 463-0660. Our friendly customer service agents are available to help you from 7:00 am until 6:00 pm Central Time.

Order Processing

Please allow up to 24 hours from order confirmation for most NorthPoint Cabinetry orders to be processed in our warehouse. Will Call orders are accepted and also require additional time for processing. You will be notified when your Will Call order is available for pickup. Will Call orders are available for pickup at our facilities between the hours of 8:00 am and 4:00 pm local warehouse time. Contact Customer Service should you need to change your order or to confirm your order is ready for pickup.

Returns

All requests for returns must be made within 60 days of invoice date. Returns are subject to a 20% restocking fee unless the return is due to Hardware Resources' error or a quality issue.

To request a Return Goods Authorization (RGA) contact Customer Service.

1. Phone: (800) 463-0660
2. Email: ReturnRequest@HardwareResources.com
3. Fax: (318) 742-9513

Include the item number, quantity and reason for return when requesting an RGA. Items should be in original packaging, unassembled and shipped with care to avoid damage. Items received with damage may not be credited.

In the event that the return is due to an error by Hardware Resources, return shipping instructions will be provided. Otherwise, shipments are the Customer's responsibility (including shipping fees) and should be shipped via a method which allows shipment tracking and proof of delivery.

Visit our full Terms and conditions documents in the links below.

QuickBuild™ Cabinetry
https://delivr.com/2fdsq

Assembled Cabinetry
https://delivr.com/2xh24